FREE BODY DIAGRAMS

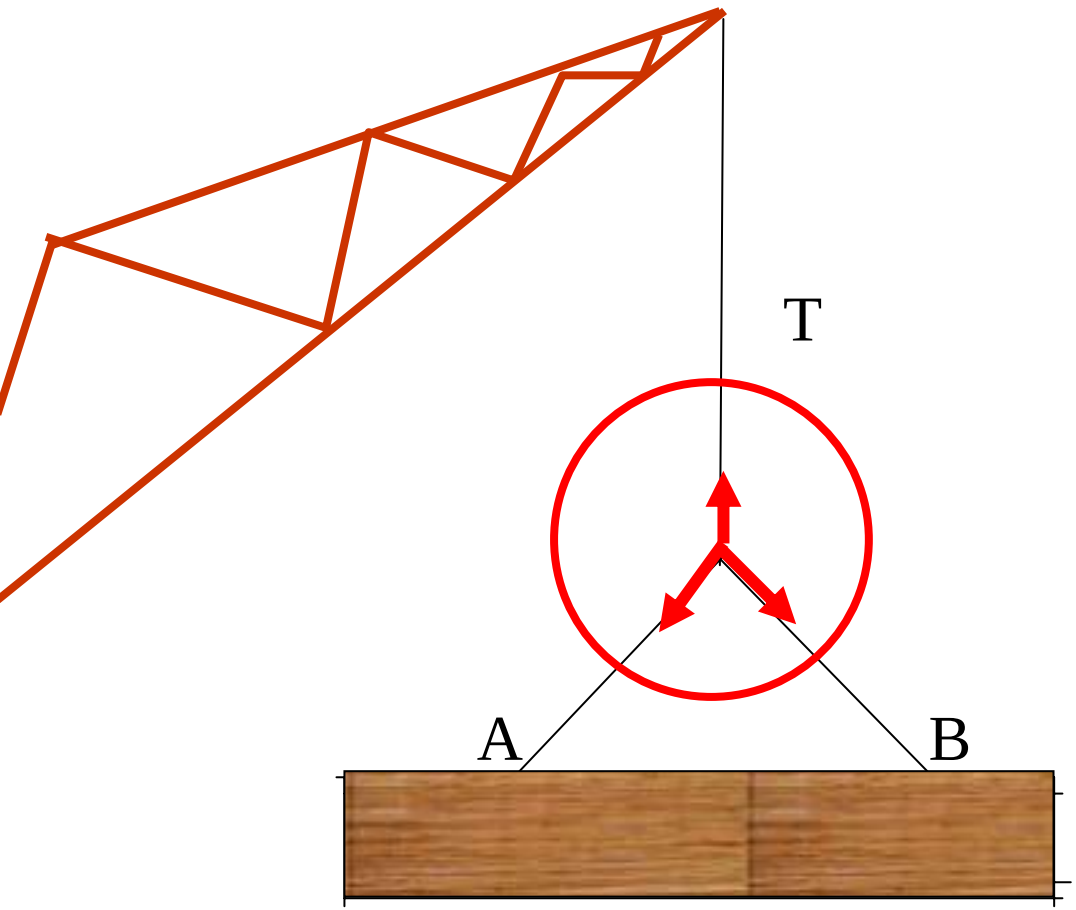

The Concurrent System

The Free Body Diagram

Free Body Diagrams

- Essential step in solving Equilibrium problems
- Complex Structural systems reduced into concise FORCE systems

WHAT IS A FREE BODY DIAGRAM?

A FBD is a simplified representation of a **PARTICLE** or **RIGID BODY** that is isolated from its surroundings and on which all applied forces and reactions are shown.

All forces acting on a particle original body must be considered, and equally important any force not directly applied on the body must be excluded.

Free Body Diagram

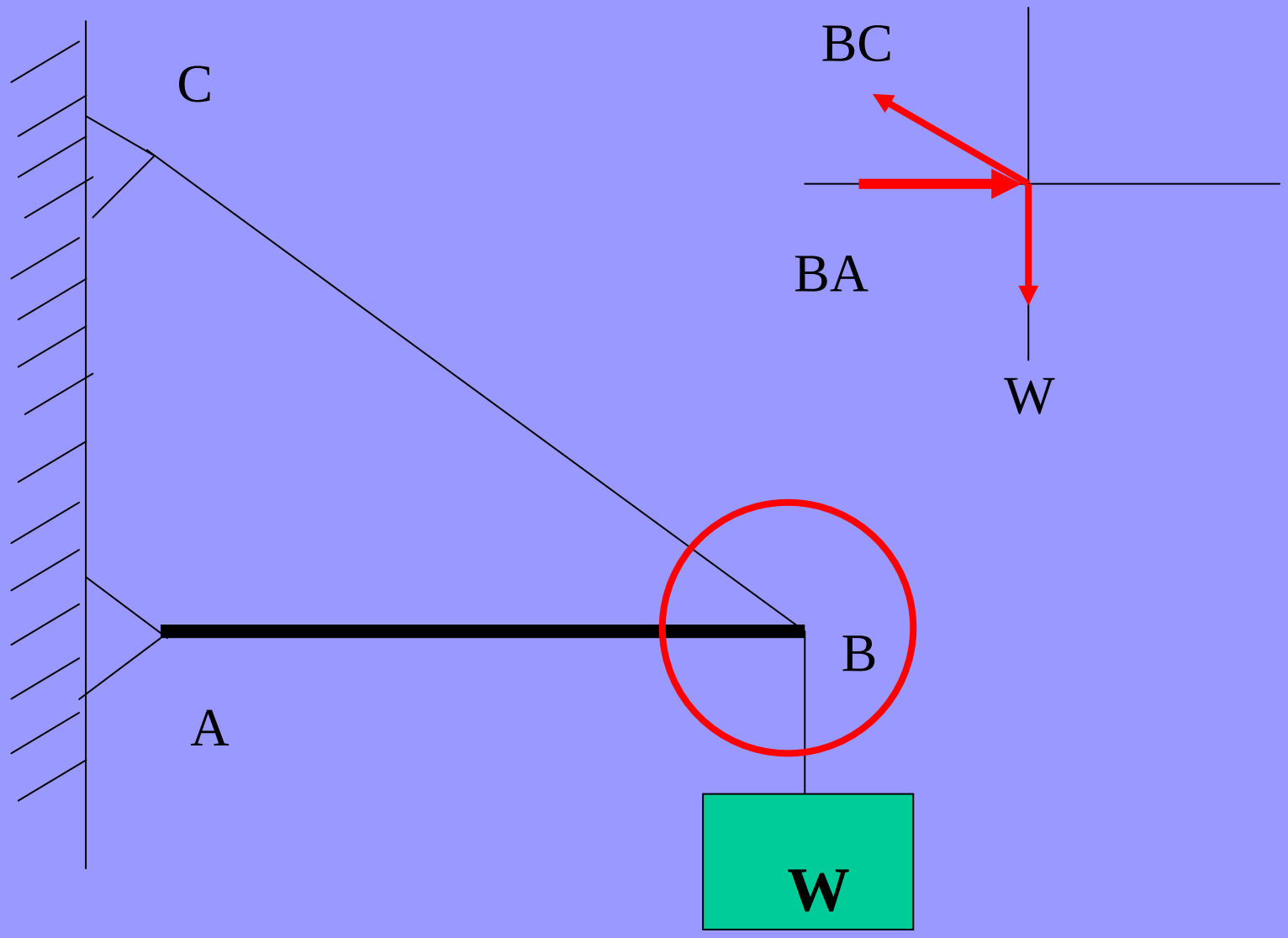

Draw the Free Body Diagrams

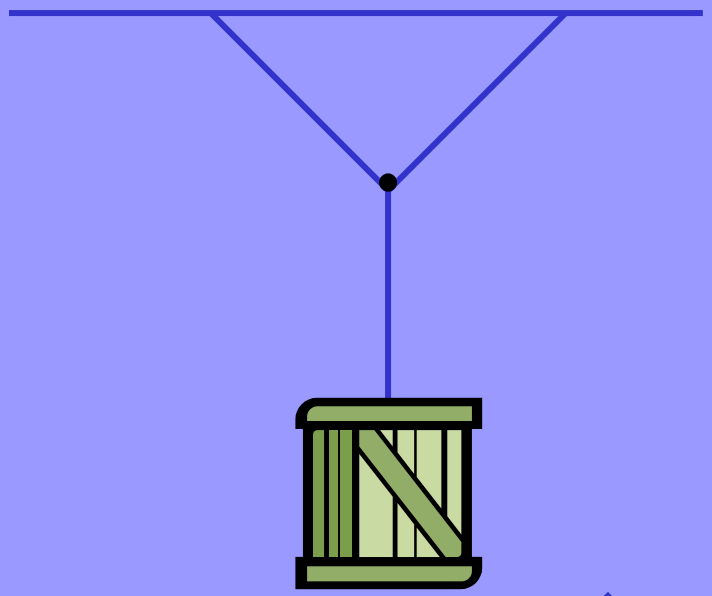

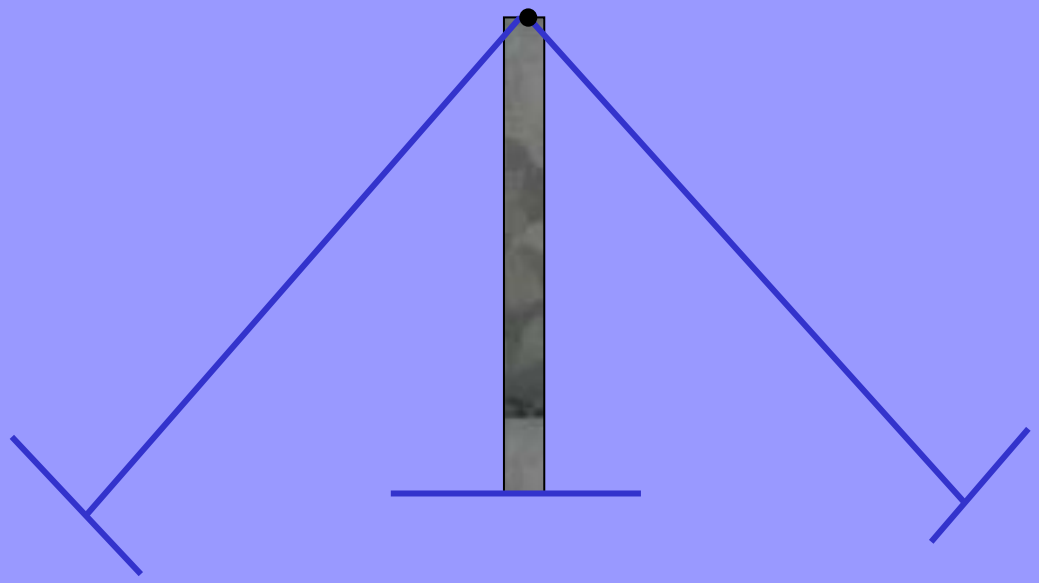

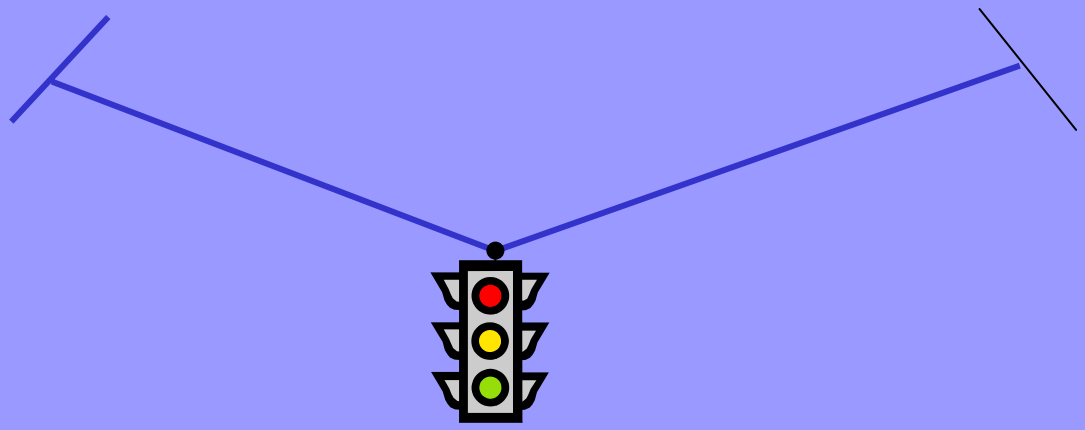

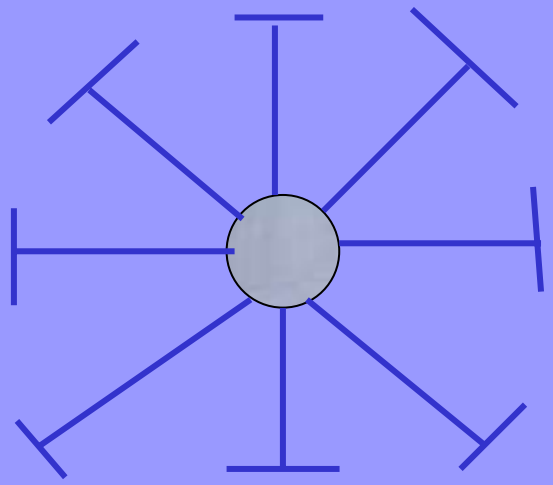

Equilibrium

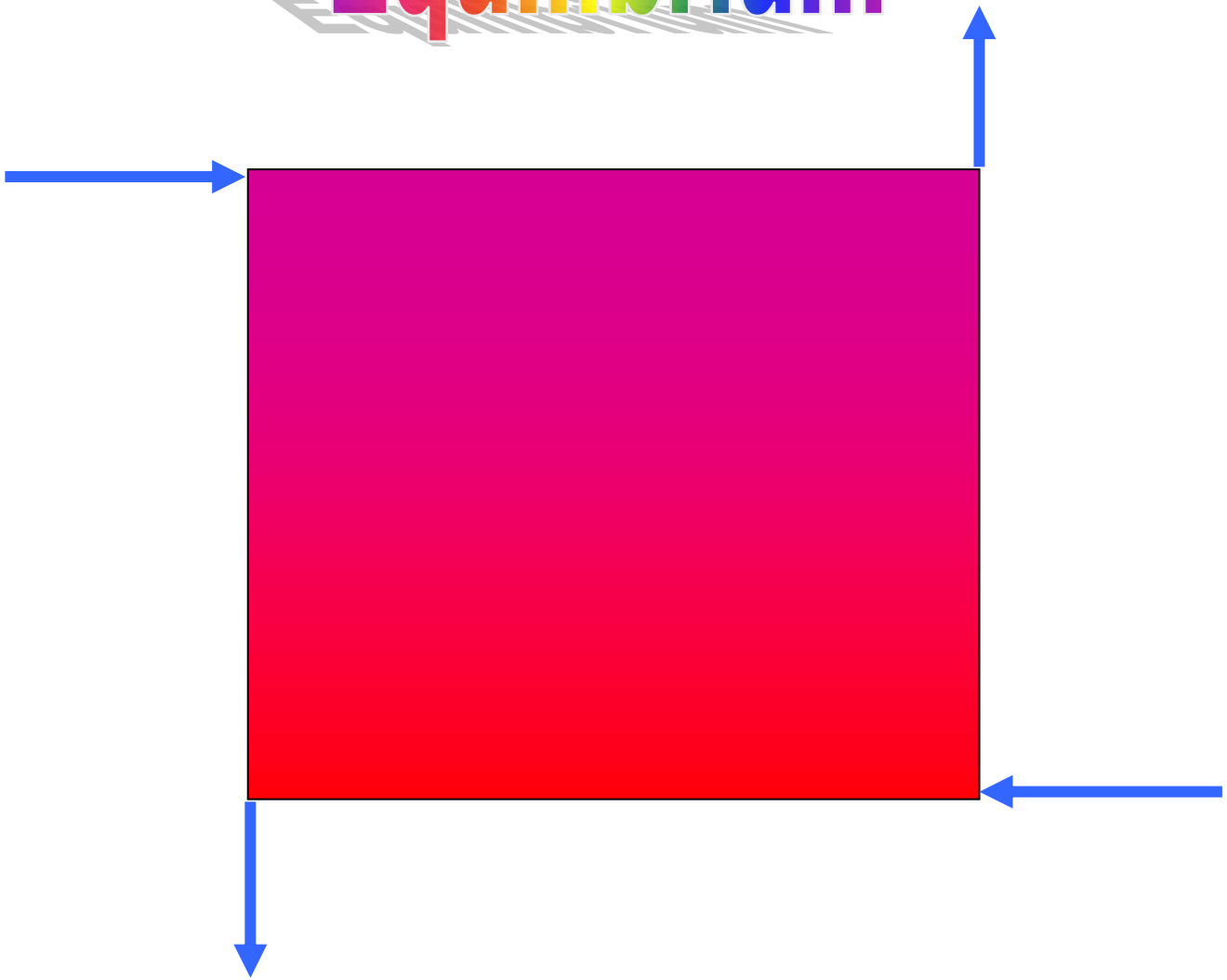

Learning Objectives

1. **To be able to explain the equilibrium of Rigid Body Systems**
2. **You will be able to draw the FBD of Simple Rigid Body Systems**

Equilibrium

Collinear System

Concurrent System

Particle

General Coplanar System

Rigid Body

$$\Sigma F_x = 0$$

$$\Sigma F_y = 0$$

$$\Sigma M_i = 0$$

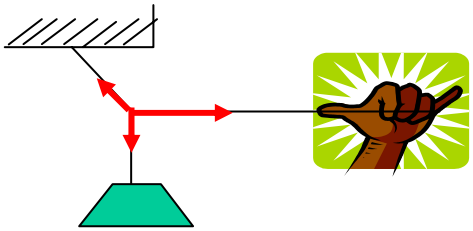

$$\Sigma F_x = 0$$

$$\Sigma F_y = 0$$

y

$$R_x = \Sigma F_x = 0$$

$$R_y = \Sigma F_y = 0$$

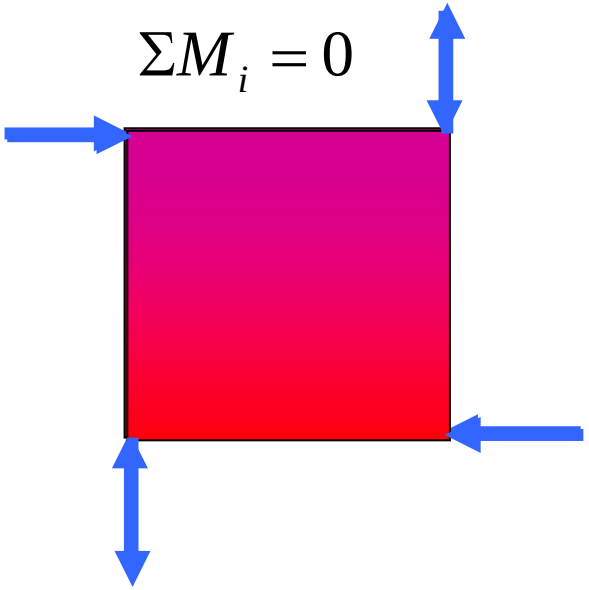

REAL LIFE CONCURRENT SYSTEM

Equilibrium of a Particle

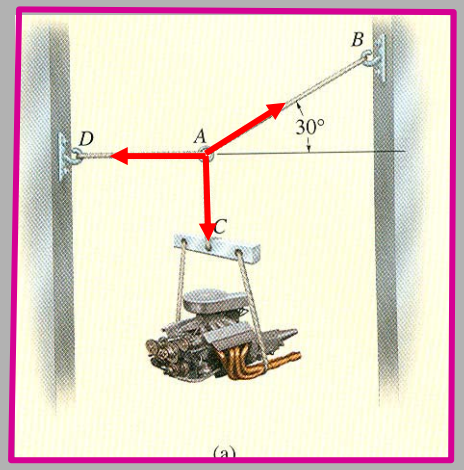

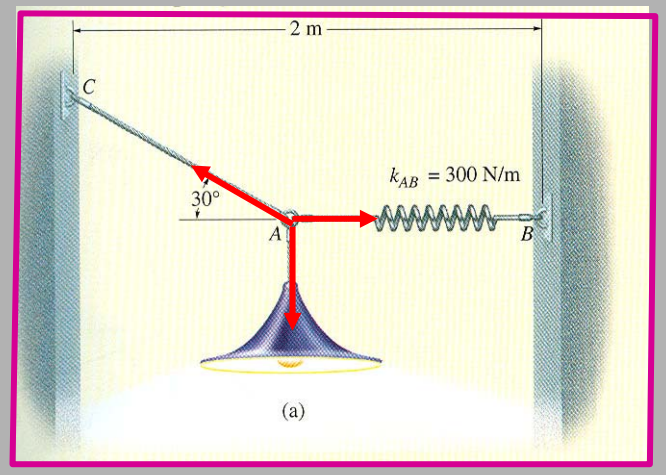

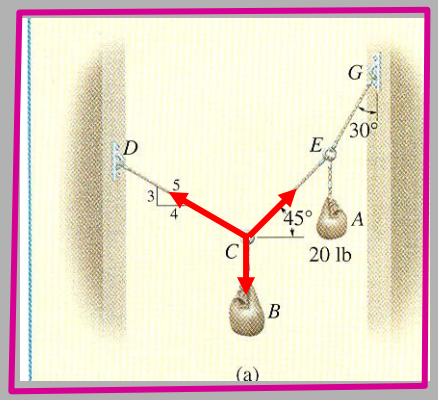

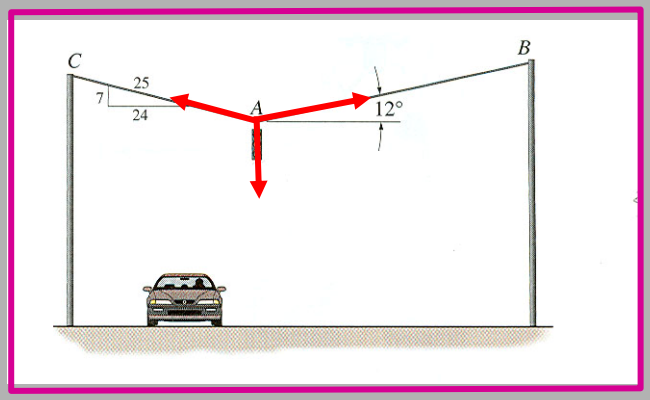

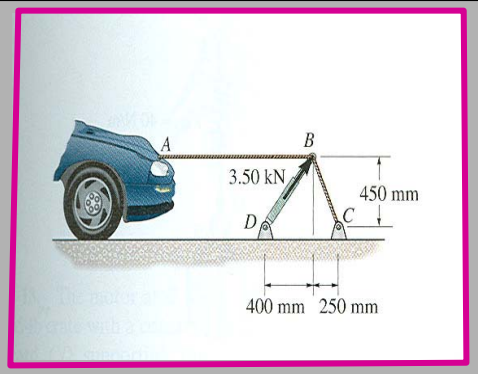
A
B
3.50 kN
450 mm
D
C
400 mm
250 mm

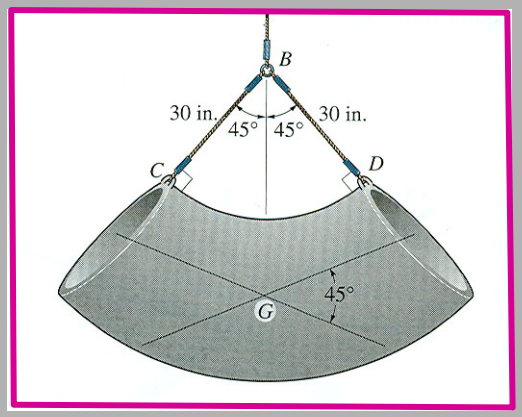
B
30 in.
30 in.
45°
45°
C
D
45°
G

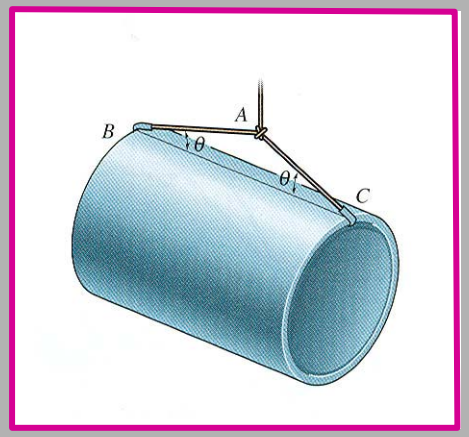
A
B
θ
θ
C

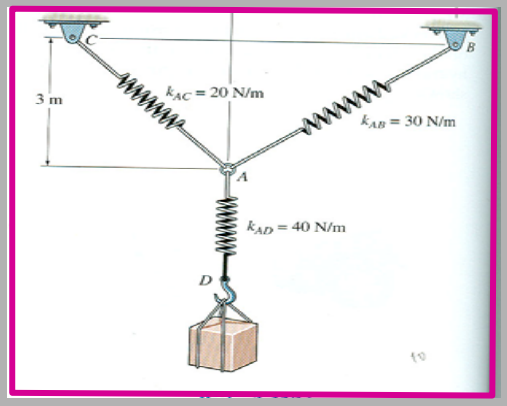
C
B
3 m
k_{AC} = 20 N/m
k_{AB} = 30 N/m
A
k_{AD} = 40 N/m
D

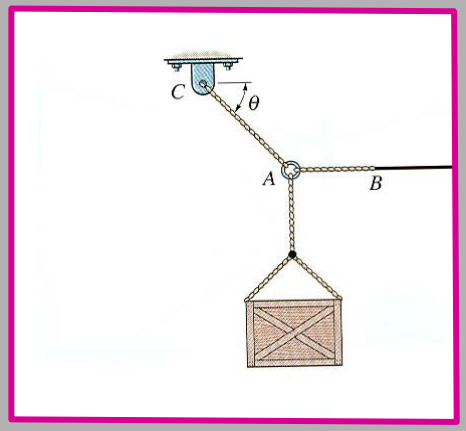
C
θ
A
B

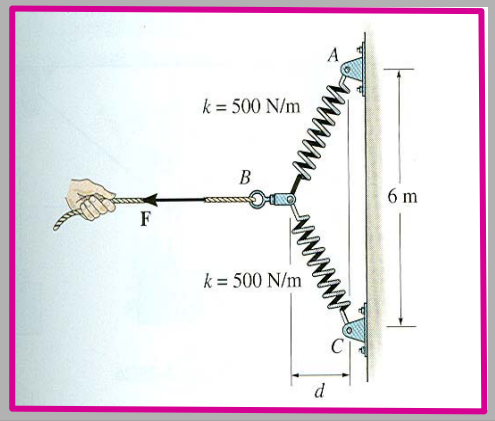
A
k = 500 N/m
B
F
6 m
k = 500 N/m
C
d

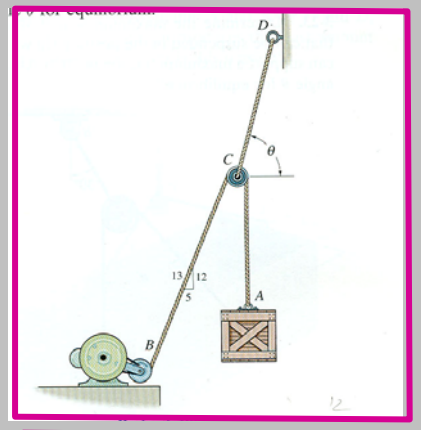
D
C
θ
13
12
5
A
B

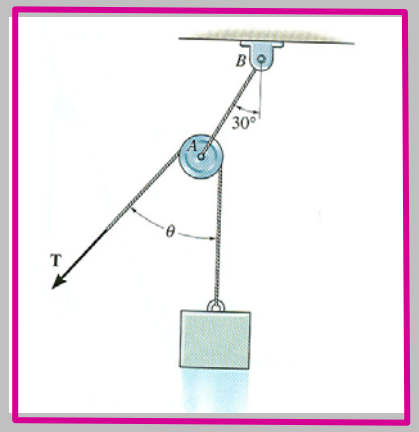
B
30°
A
θ
T

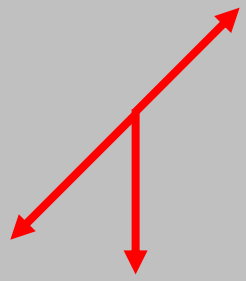

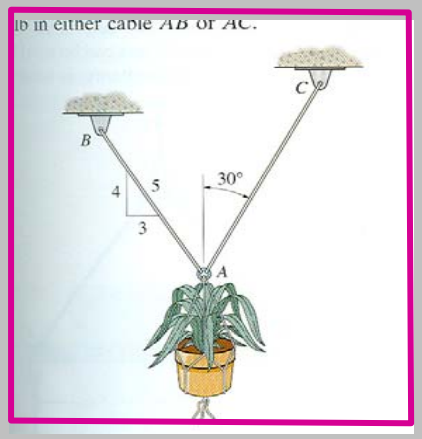
lb in either cable AB or AC.
C
B
4
5
30°
3
A

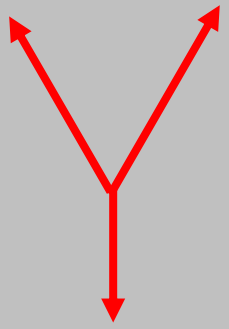

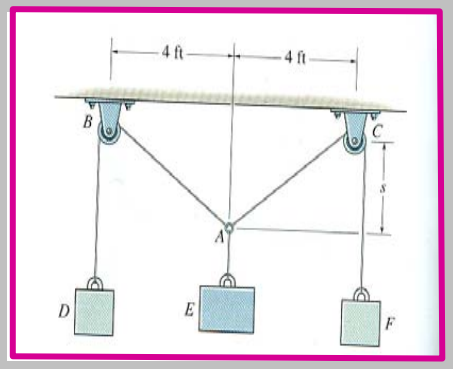
4 ft
4 ft
B
C
s
A
D
E
F

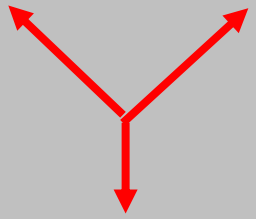

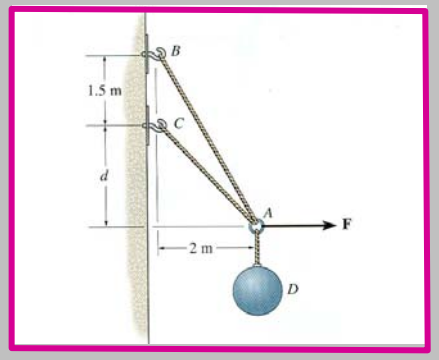
B
1.5 m
C
d
A
F
2 m
D

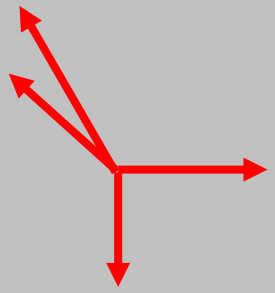

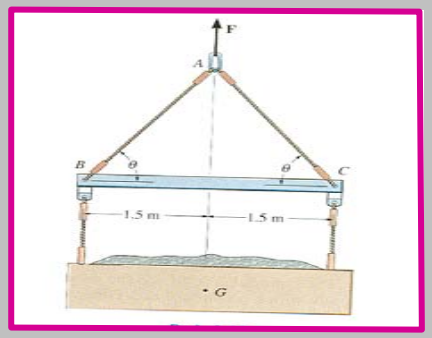
F
A
B
θ
θ
C
1.5 m
1.5 m
G

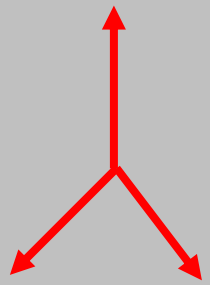

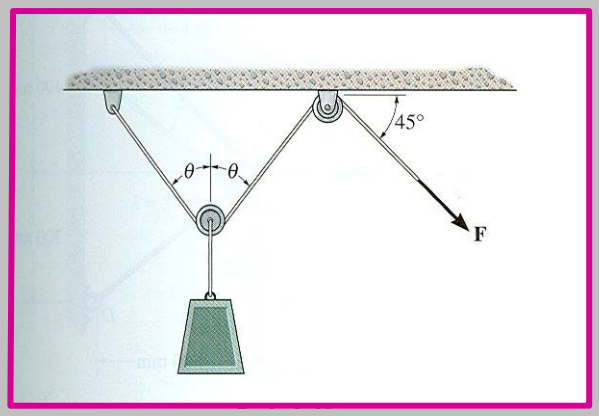
45°
θ
θ
F

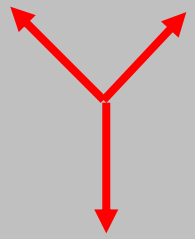

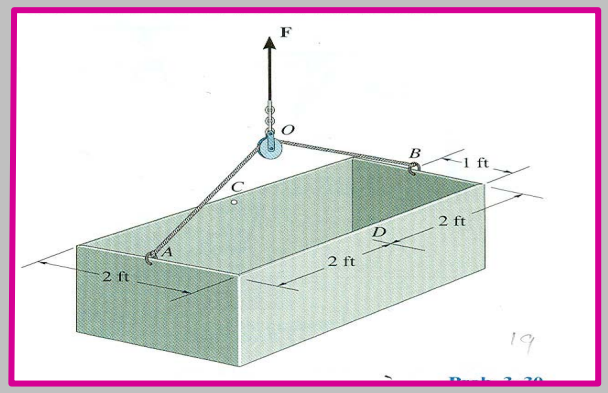
F
O
B
1 ft
C
2 ft
D
A
2 ft
2 ft
19

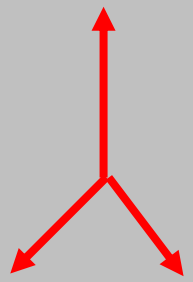

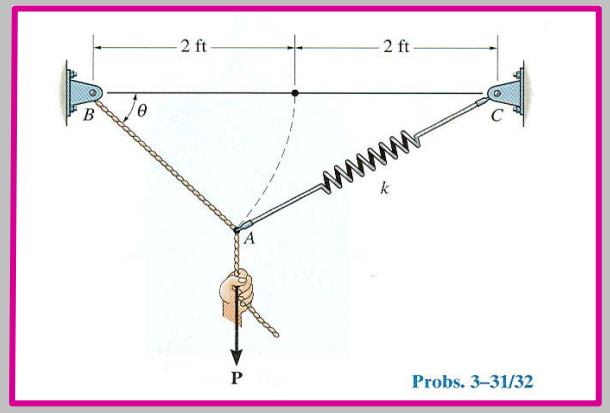
2 ft
2 ft
B
θ
C
k
A
P
Probs. 3–31/32

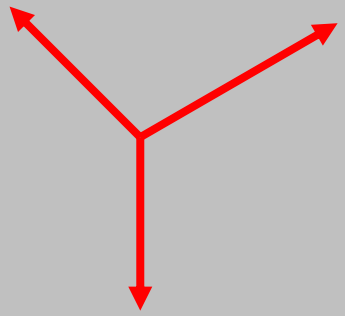

Problem

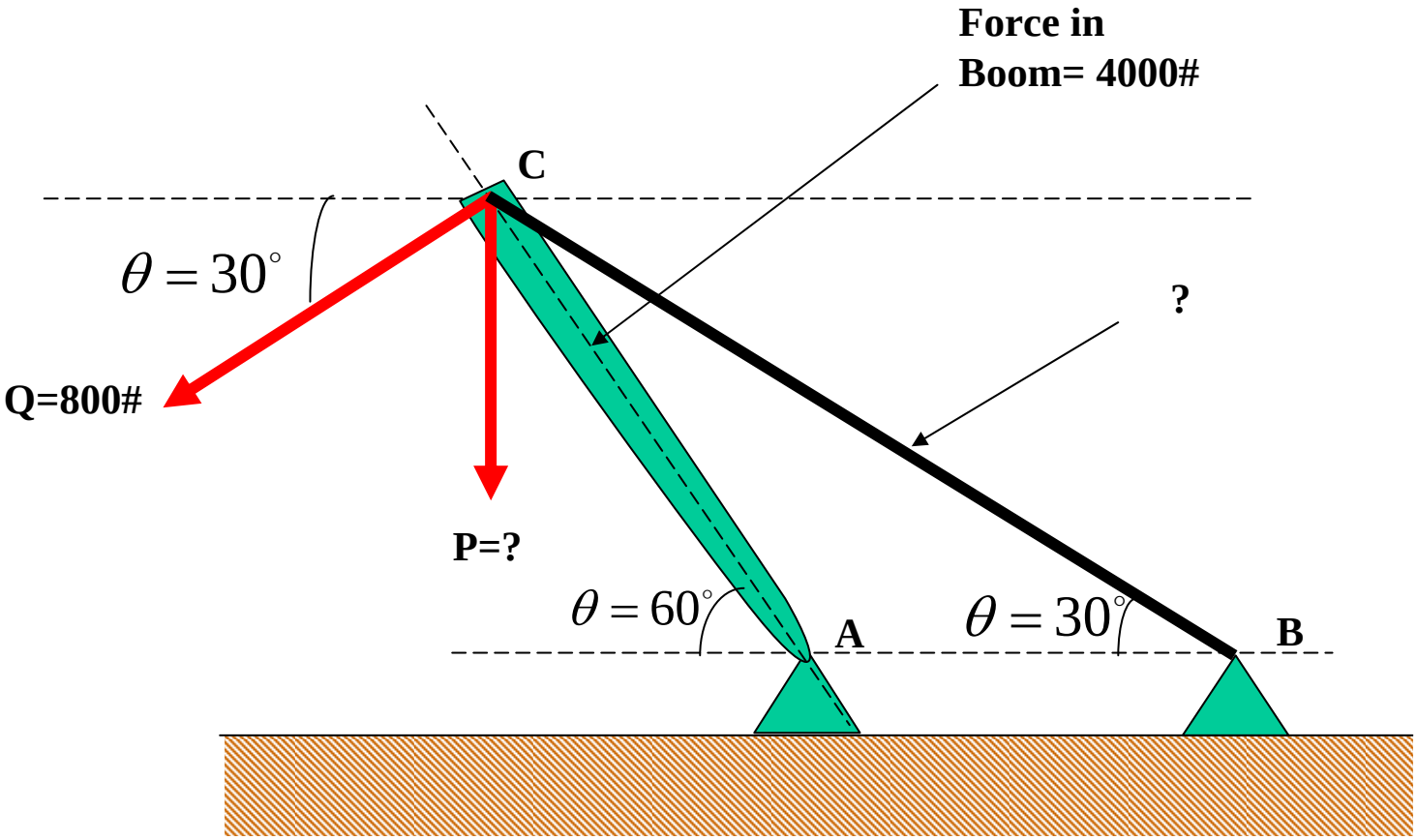
Force in
Boom= 4000#
C
$\theta = 30^\circ$
?
Q=800#
P=?
$\theta = 60^\circ$
A
$\theta = 30^\circ$
B

Problem

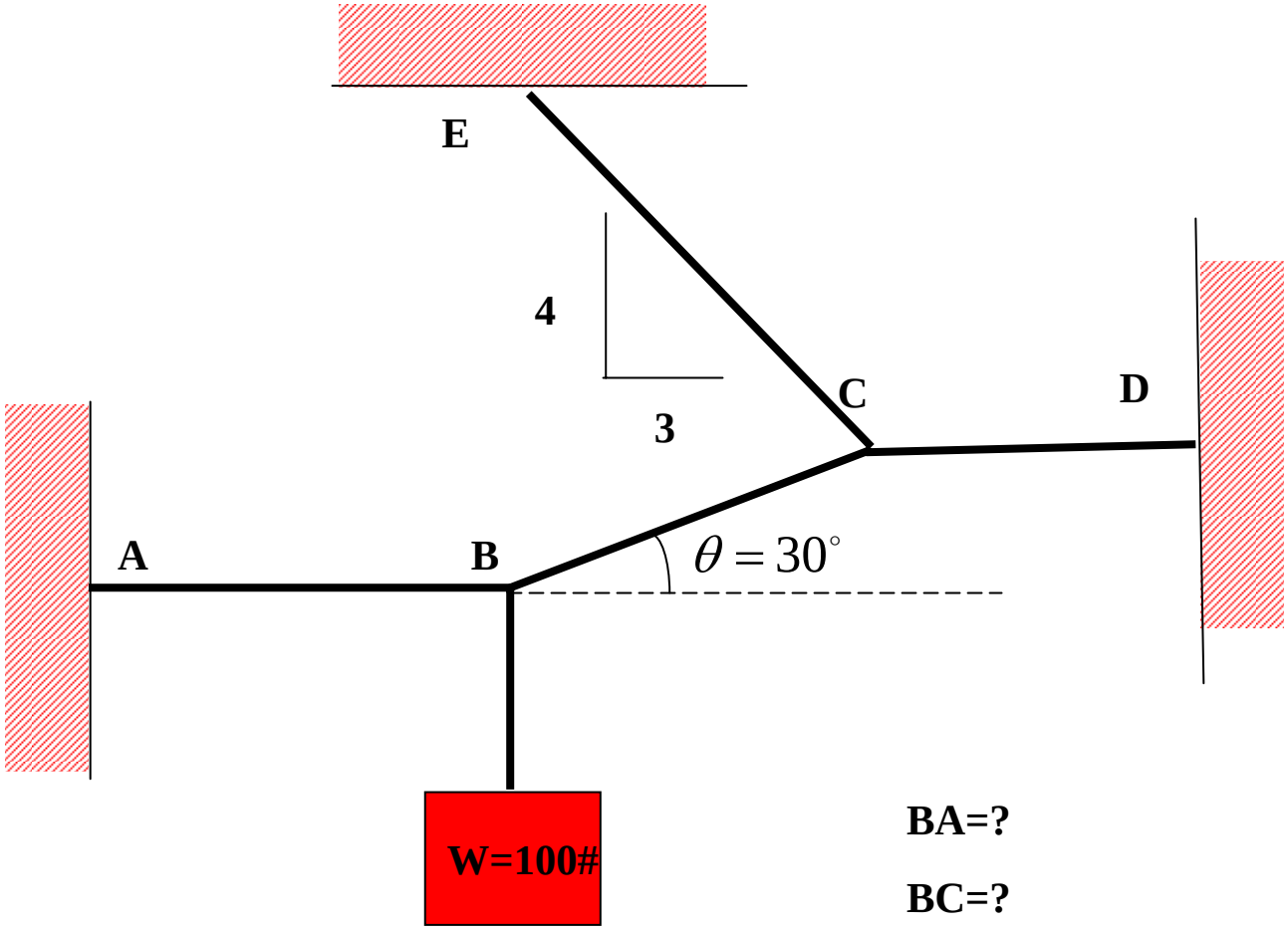

BA=?

BC=?

CD=?

CE=?

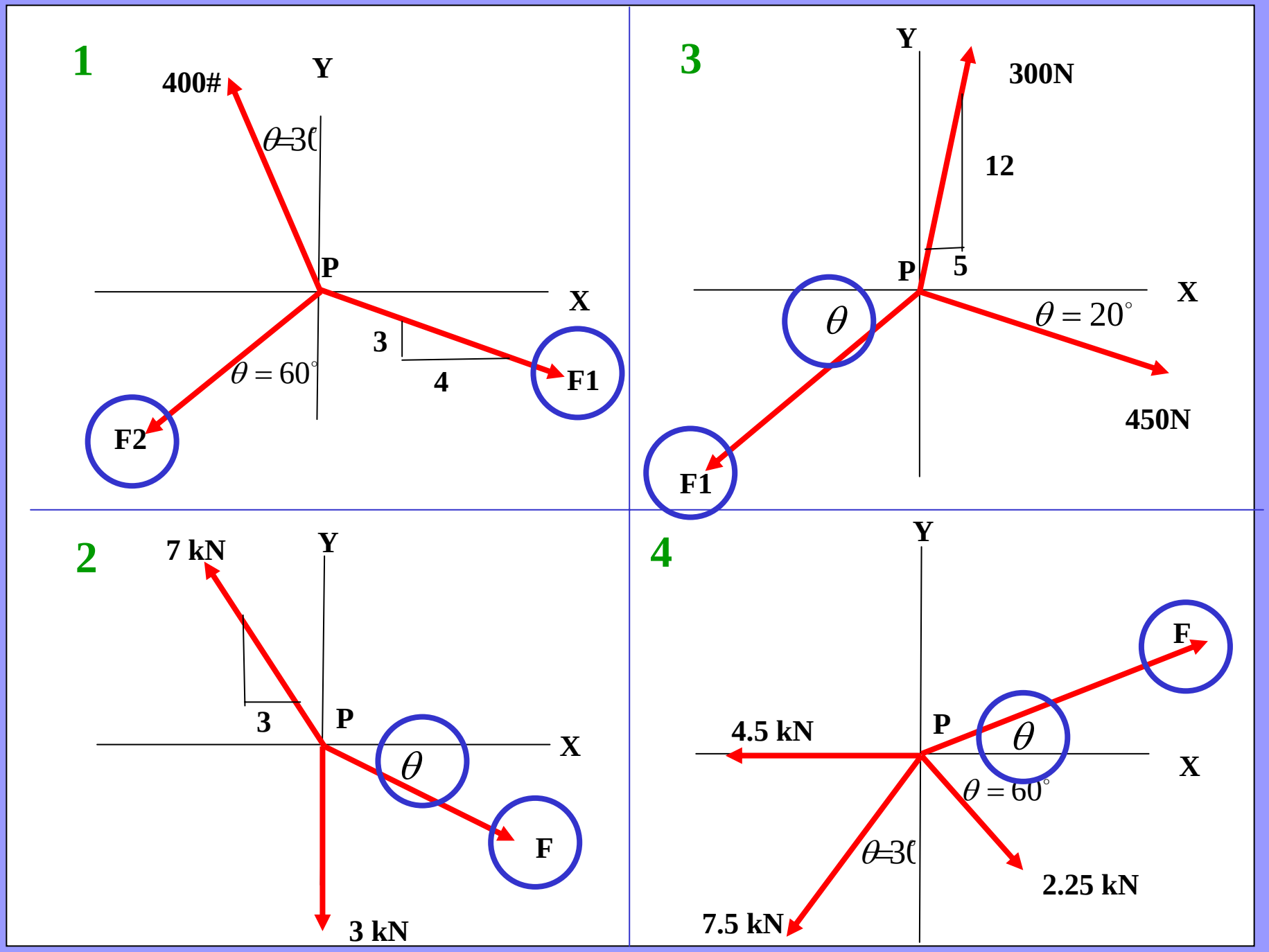
1
400#
Y
θ=30
P
X
3
4
θ = 60°
F1
F2
3
Y
300N
12
P
5
X
θ
θ = 20°
450N
F1
2
7 kN
Y
3
P
X
θ
F
3 kN
4
Y
F
4.5 kN
P
θ
X
θ = 60°
θ=30
2.25 kN
7.5 kN

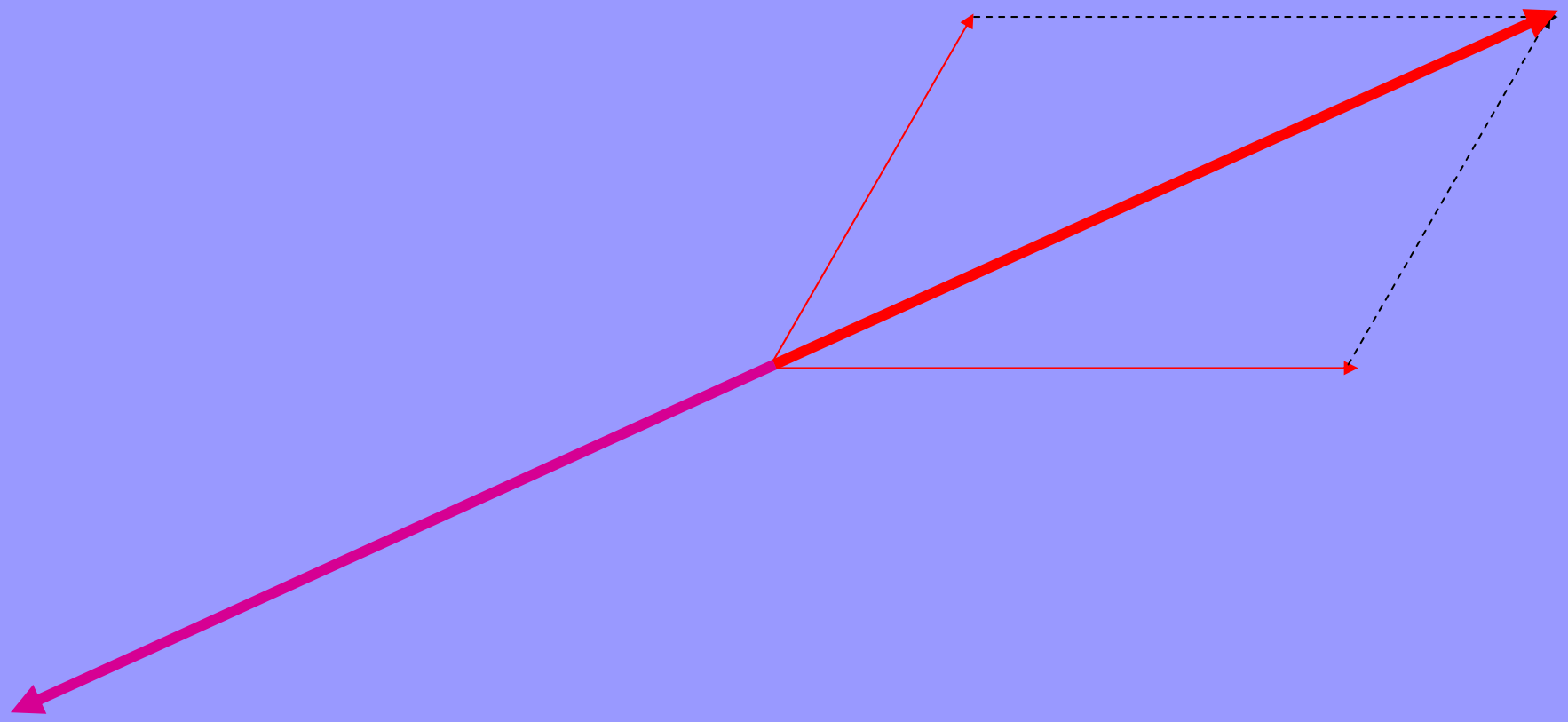

TIP-TO-TAIL METHOD

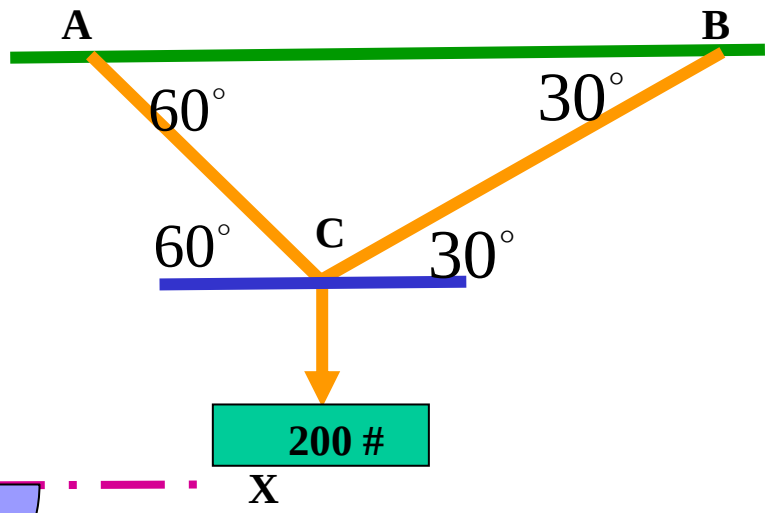

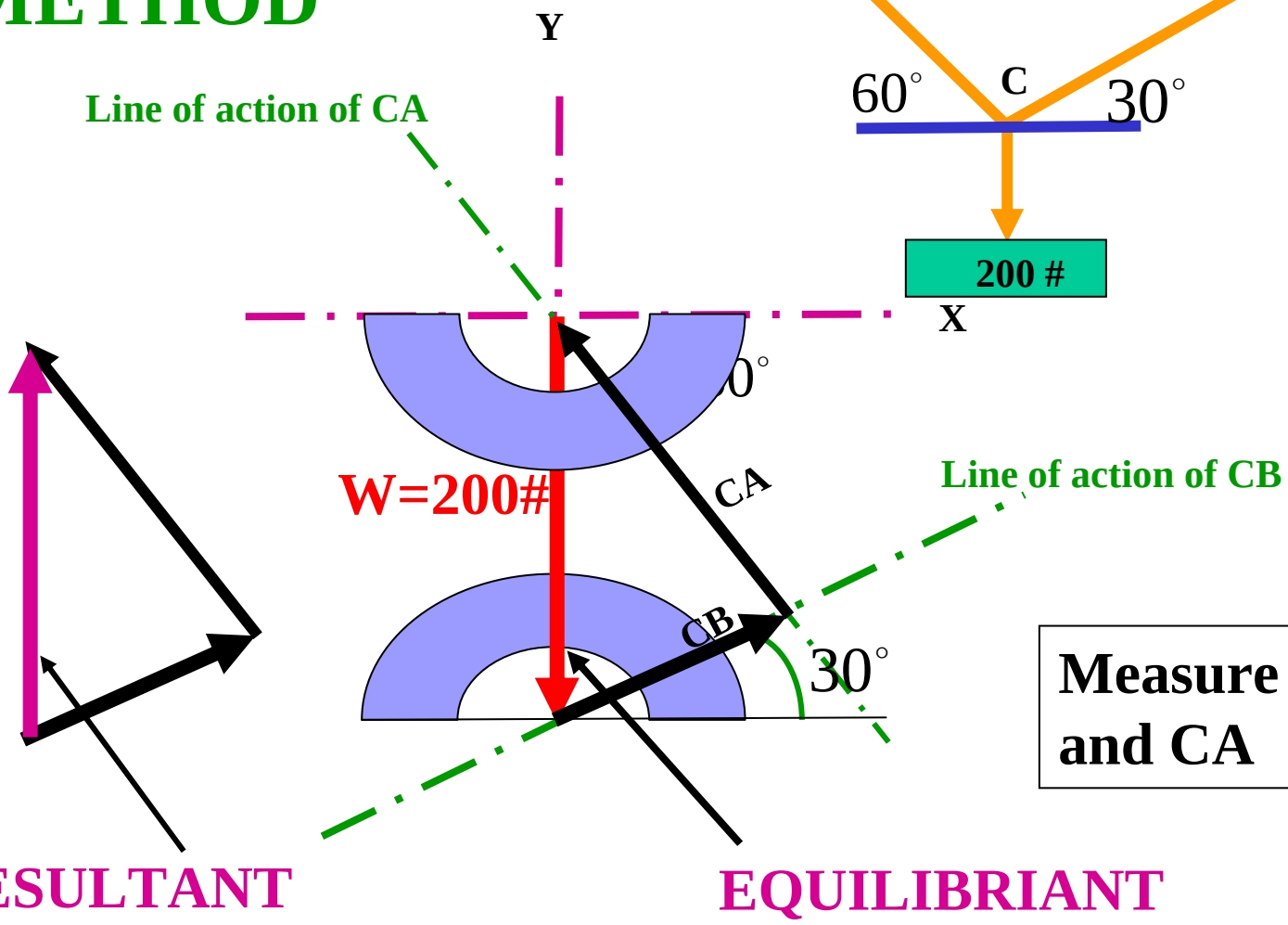

Measure CB and CA

PARALLELOGRAM METHOD

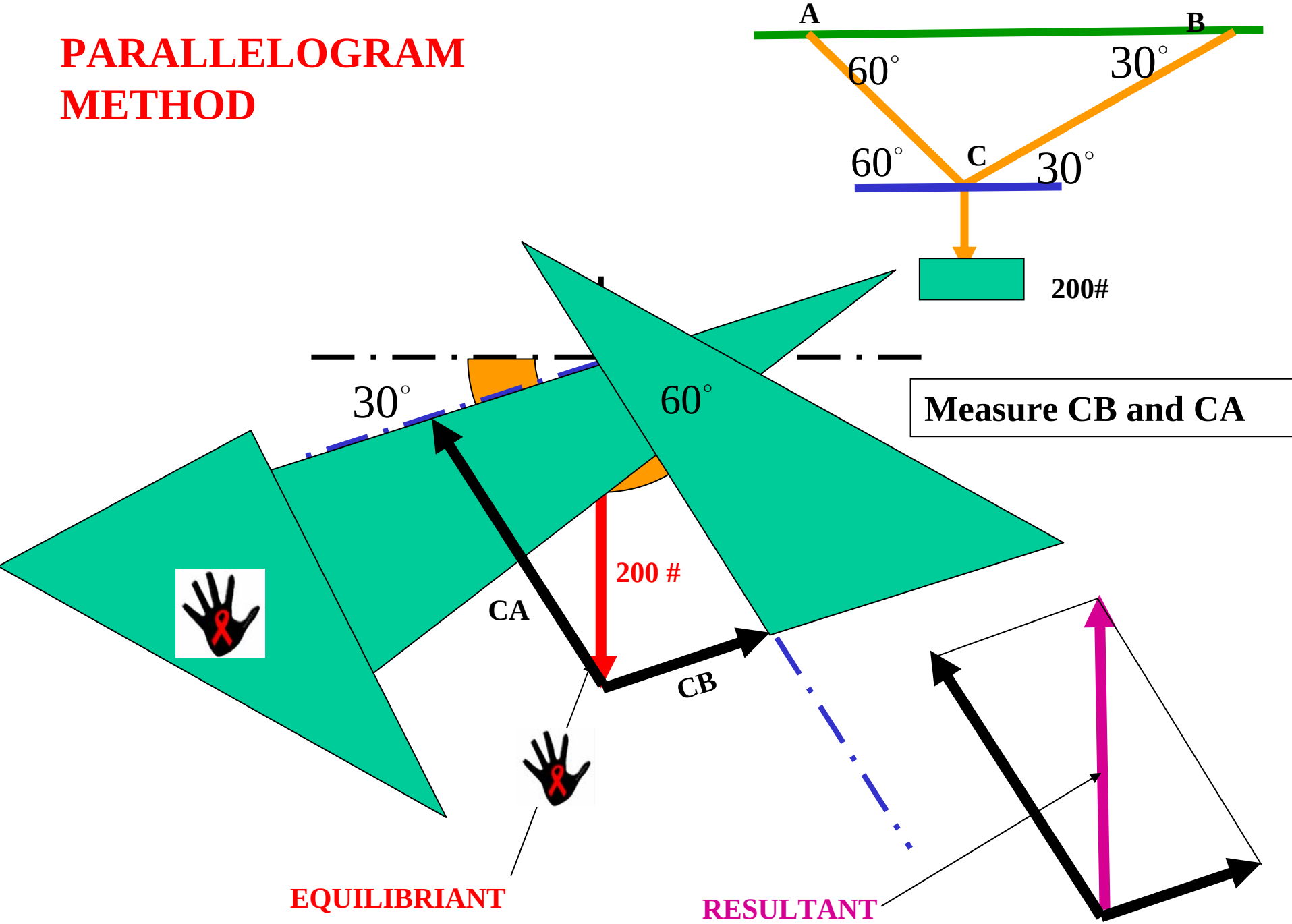

RIGID BODY SYSTEMS

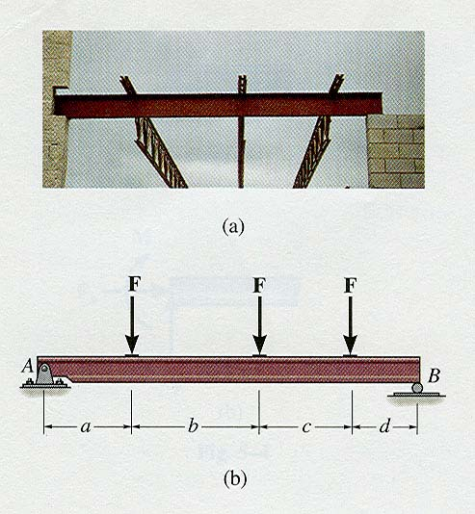

ASimple Supported Beam

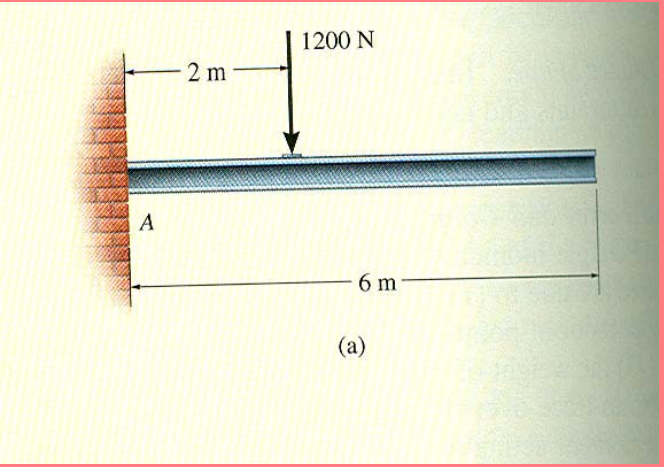

A Cantilever Beam

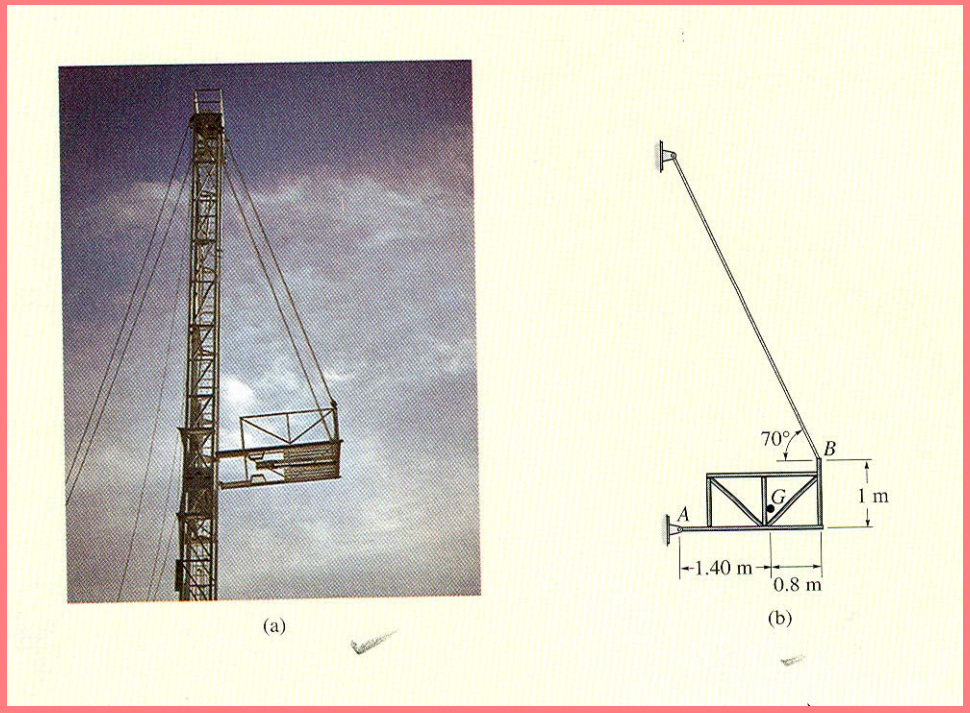

A Mast with a Platform

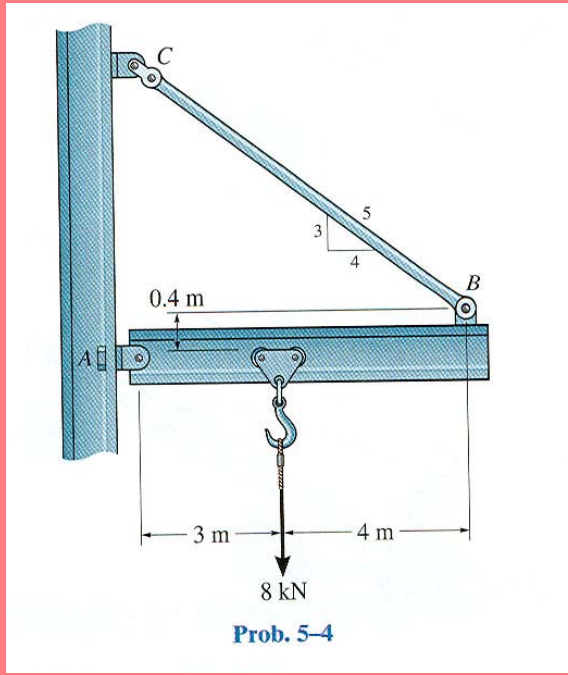

Hinged Beam with support

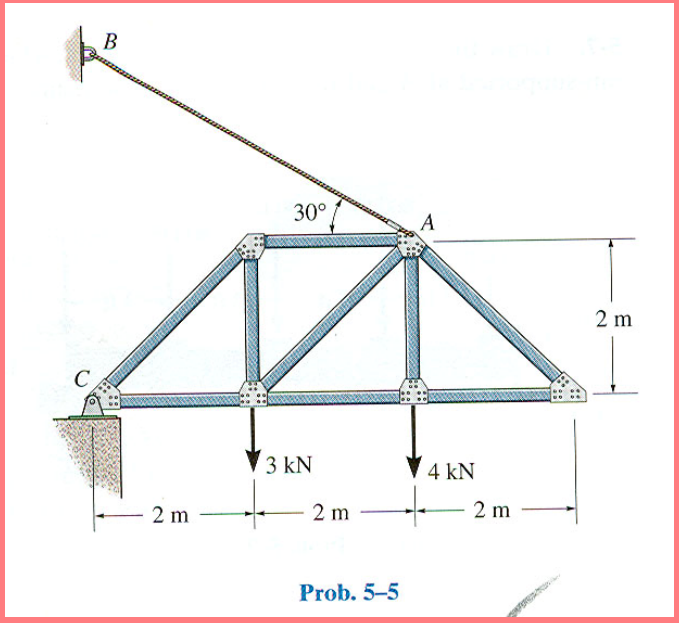

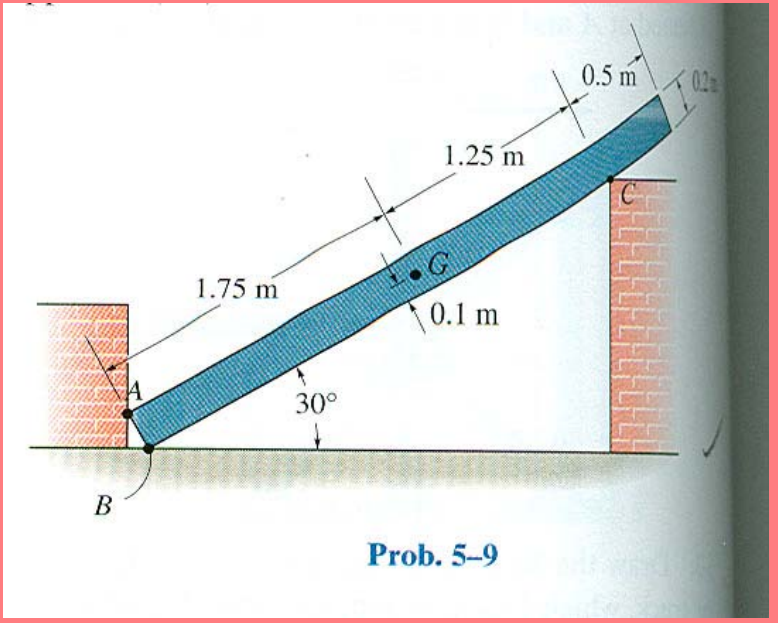

A CantileverTruss with Cable support

An Inclined Beam

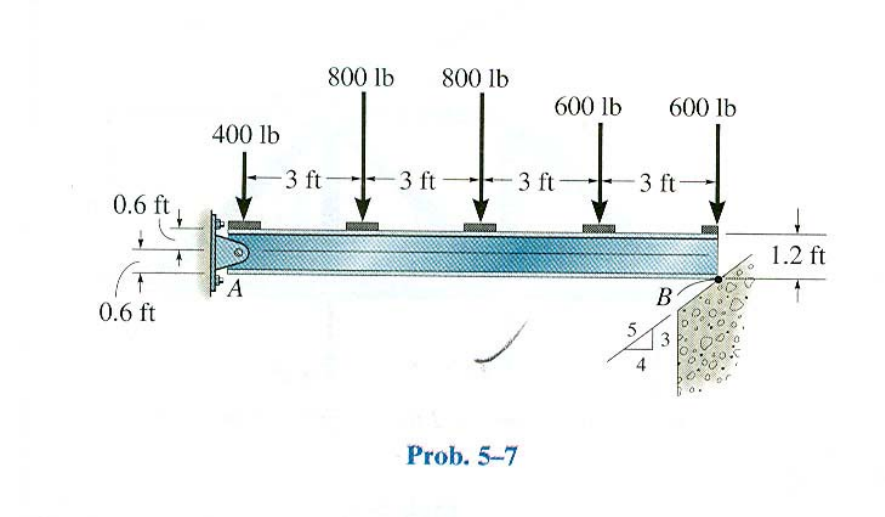

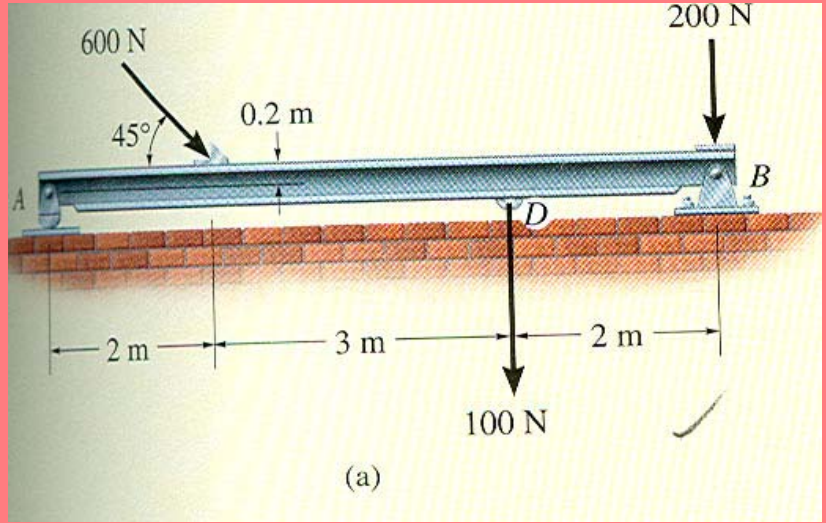

A simply supported beam

A simply supported beam

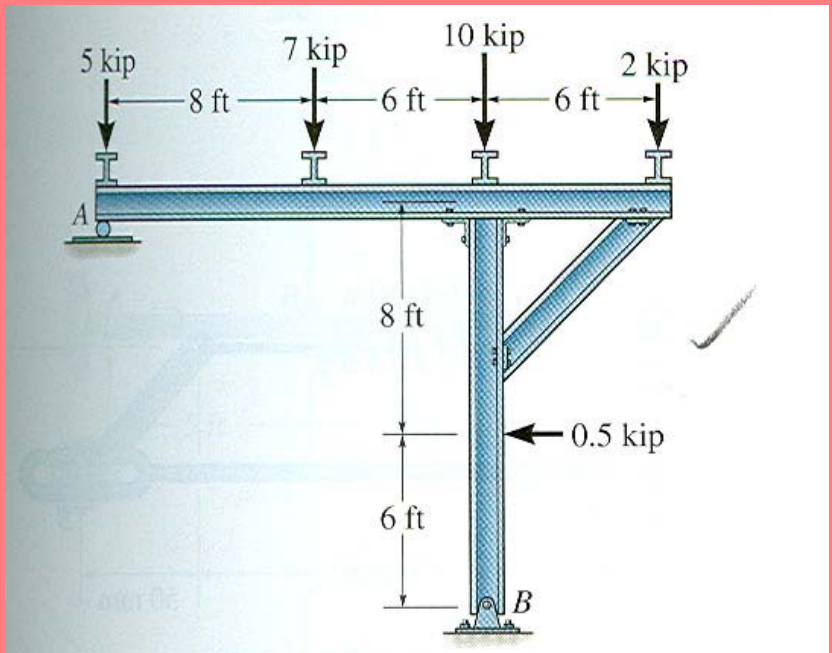

Prob. 5–20

A Beam Supported by a Column and a Knee Frane

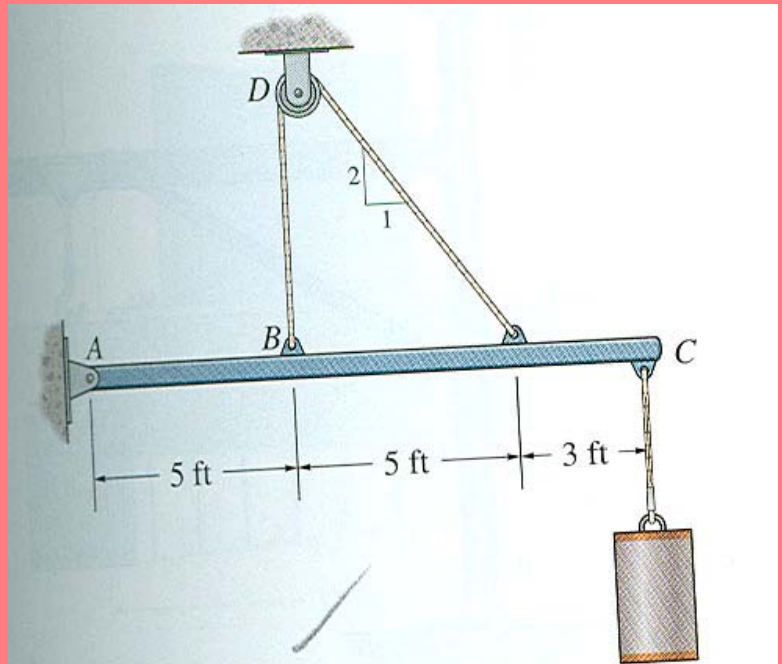

Prob. 5–28

Hinged cantilever beam with cable support

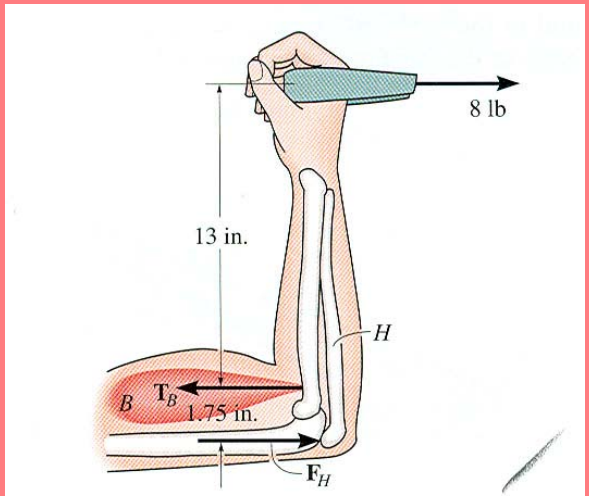

Prob. 5–22

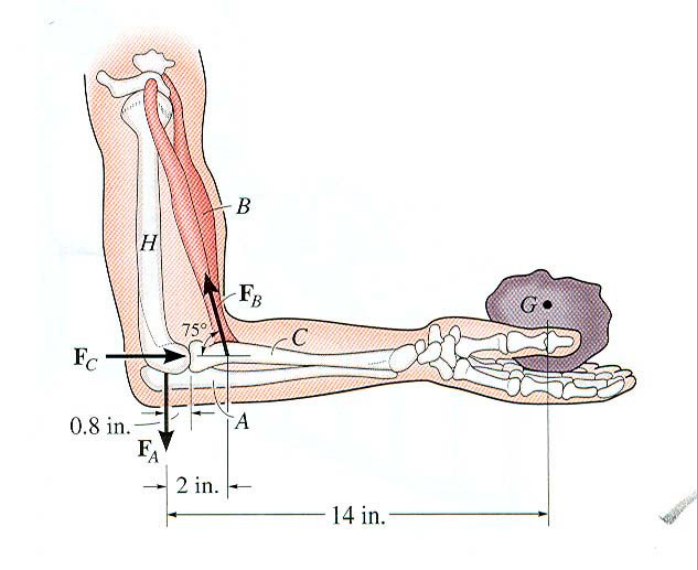

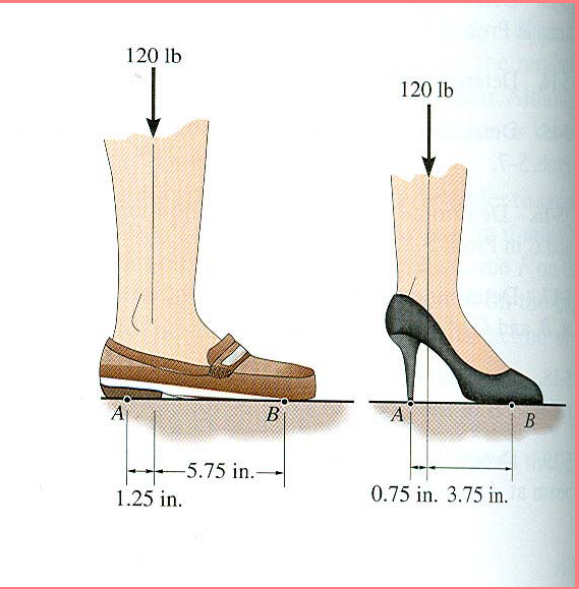

Examples from Bio-Medical

Engineering – Human structural systems

APPLIED AND REACTIVE FORCES

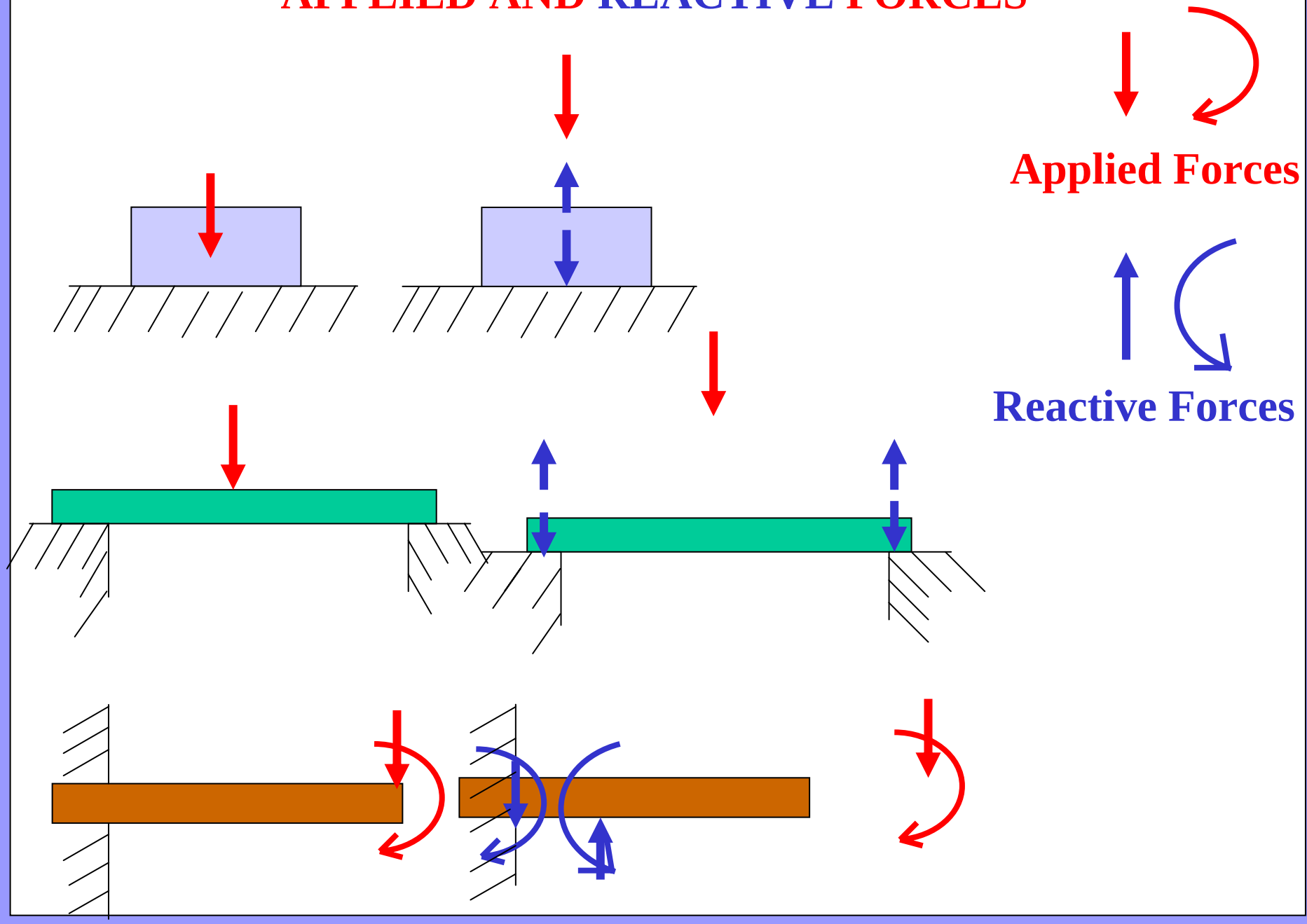

APPLIED AND REACTIVE FORCES

Forces and Moments that act on a Rigid Body can be divided into two Primary types: applied and reactive.

In common Engineering usage, applied forces are forces that act directly on a structure (like, dead, live load etc.) Reactive forces are forces generated by the action of one body on another and hence typically occur at connections or supports. The existence of reactive forces follows from Newton's third law, which state that to every action , there is an equal and opposite reaction.

More precisely, the law states that whenever one body exerts a force on another, the second always exerts a force on the first that is equal in magnitude and opposite in direction and that has the same line of action.

In the second figure the beam causes downward forces on the foundation, and upward reactive forces are consequently developed. A pair of action and reaction forces thus exists at each interface between the beam and its foundations. In some cases, moments form part of the reaction system as well

The above diagrams, which show the complete system of applied and reactive forces acting on a body, are called **free body diagrams.**

The whole system of applied and reactive forces acting on a body must be in a state of equilibrium. **Free-body diagrams** are, consequently ,often called **equilibrium diagrams**.

Drawing equilibrium diagrams and finding reactions for loaded structural members is a common first step in a complete structural analysis

SUPORT CONDITIONS

The nature of **Reactive Forces** developed on a loaded body depends on the exact way in which the body is supported.

The **Three Basic Ways** in which Beams and other structures are supported are

ROLLER SUPPORT

PIN SUPPORT or PIN CONNECTION

FIXED SUPPORT or FIXED CONNECTION

Roller, Hinge and Fixed Supports

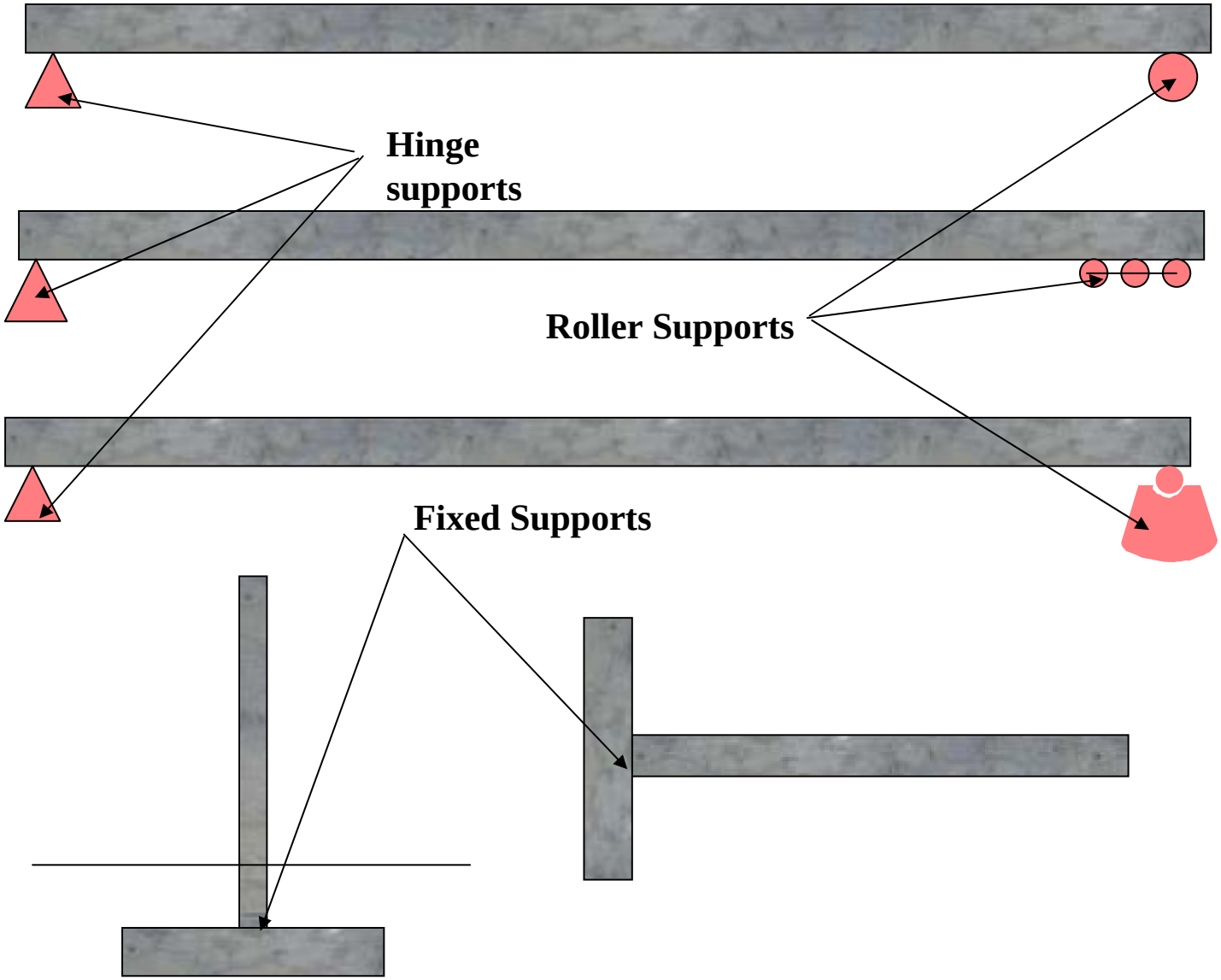

ROLLER SUPPORT

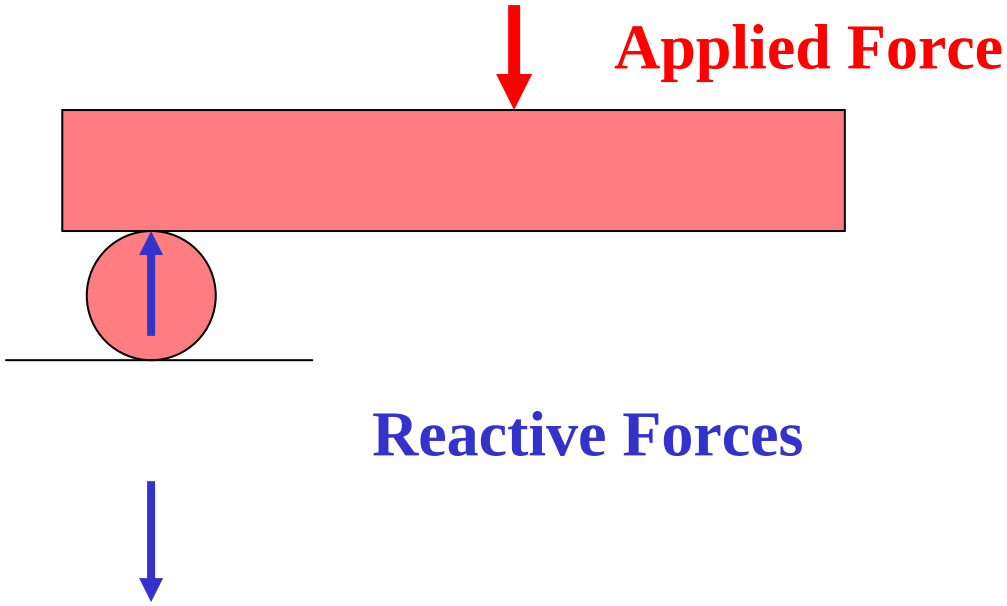

The Reactive Force must always be perpendicular to the surface for a ROLLER

Roller Support

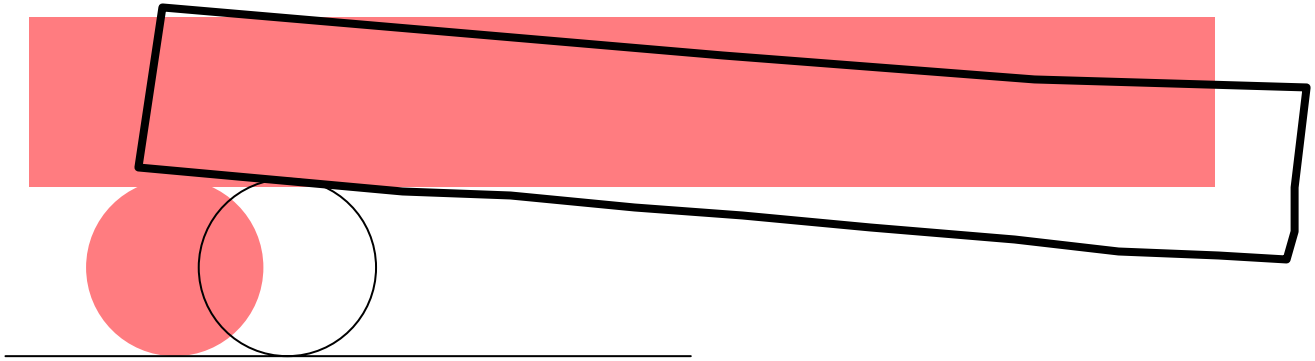

Roller Support allows horizontal movement

It allows the beam to bend

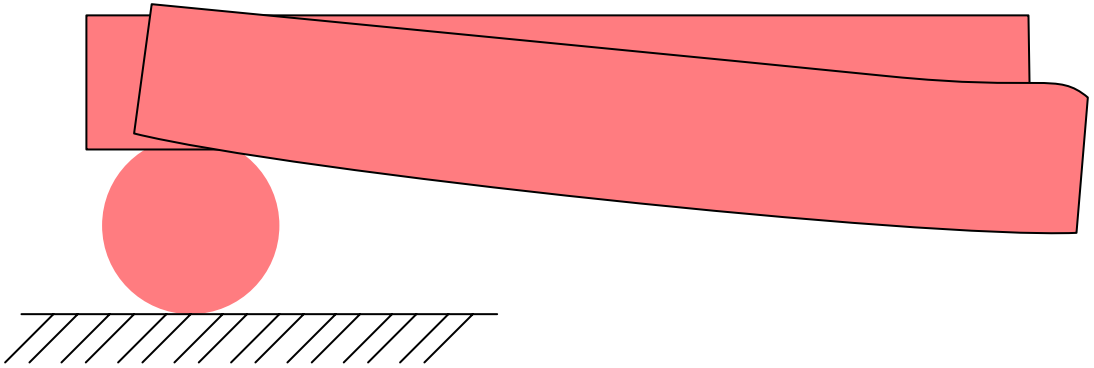

Rocker Support

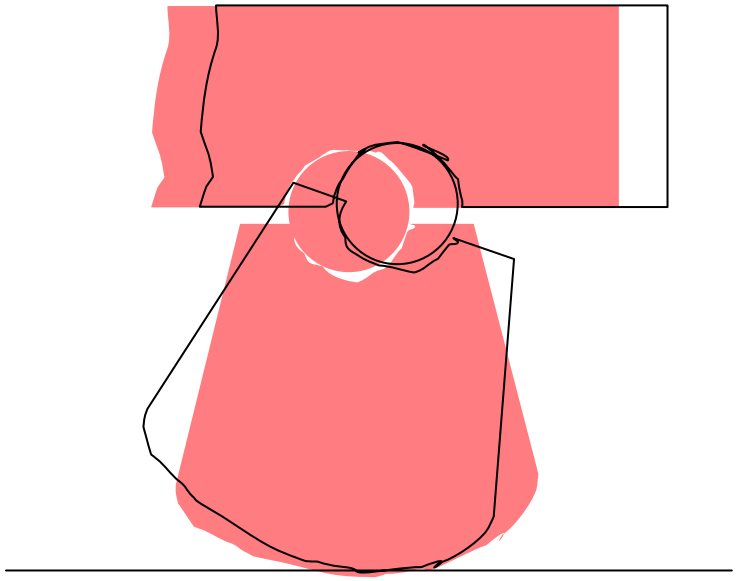

A Rocker Support is similar to the Roller Support

A variation of Roller Support

PIN or HINGE SUPPORT

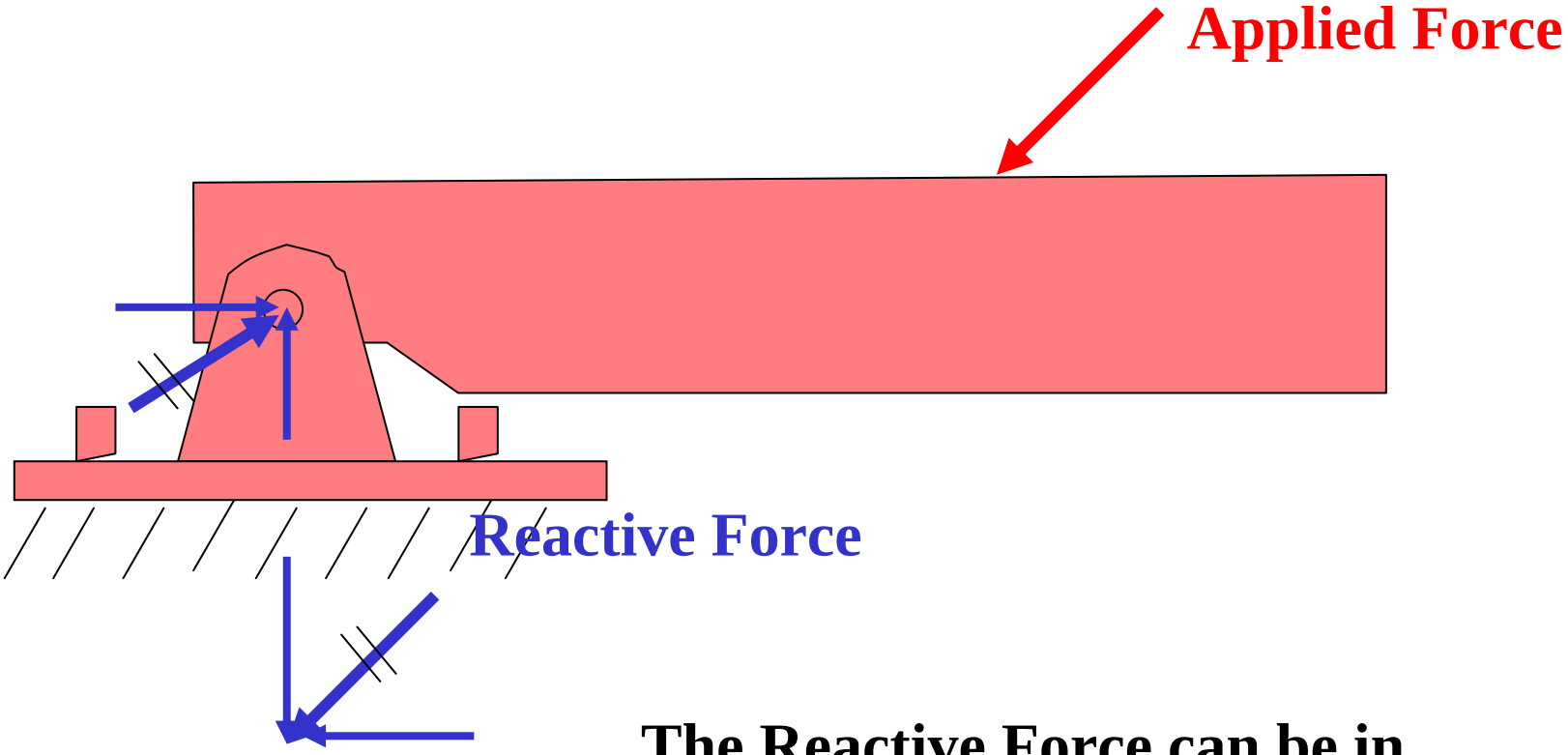

The Reactive Force can be in any direction

Pin or Hinge Support

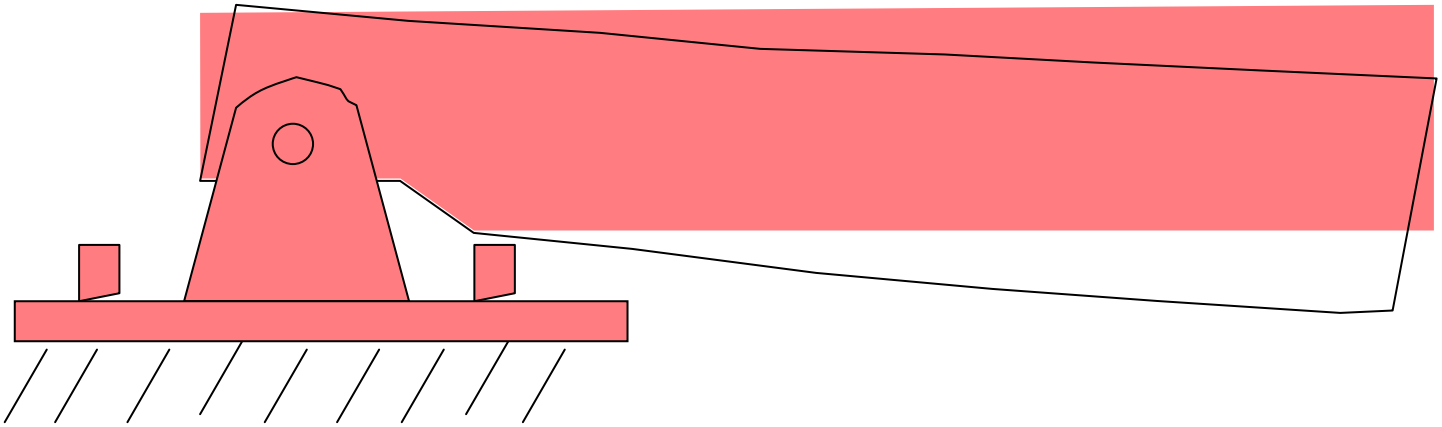

Pin support does no allow any movement

It allows the beam to bend

FIXED SUPPORT

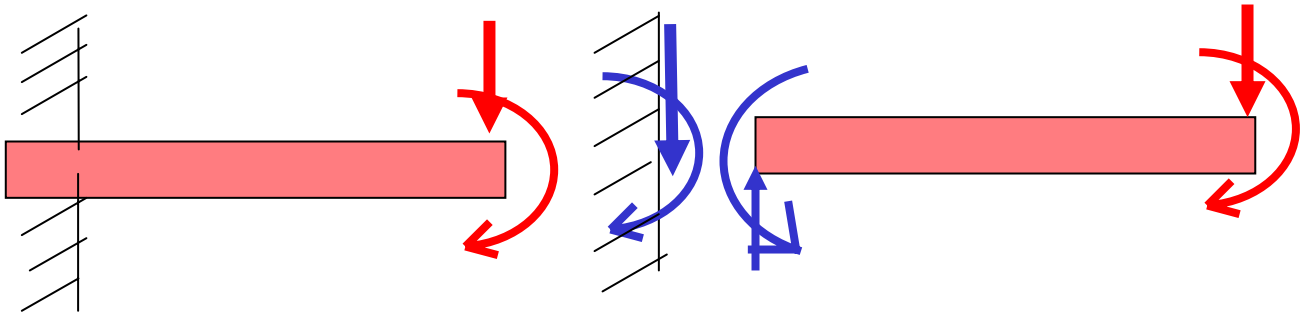

No movement

No Rotation

Why Roller Support is Important?

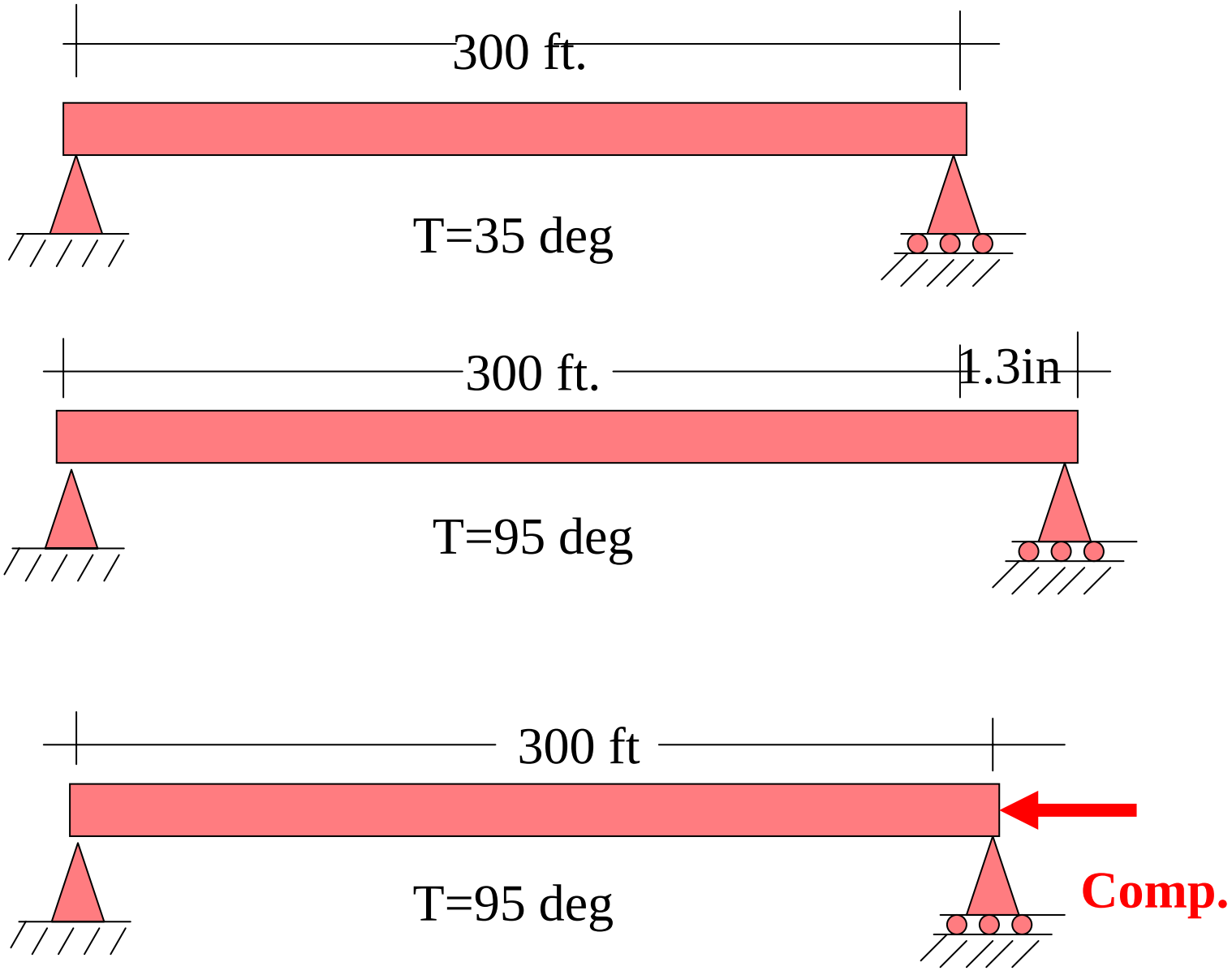

Half the strength of the Bridge is lost

Why Hinge Support is Important ?

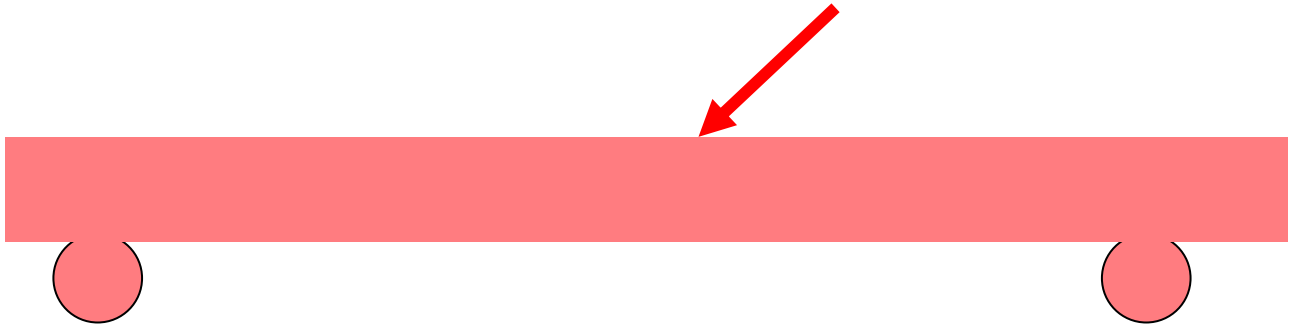

Why Fixed Support is Important?

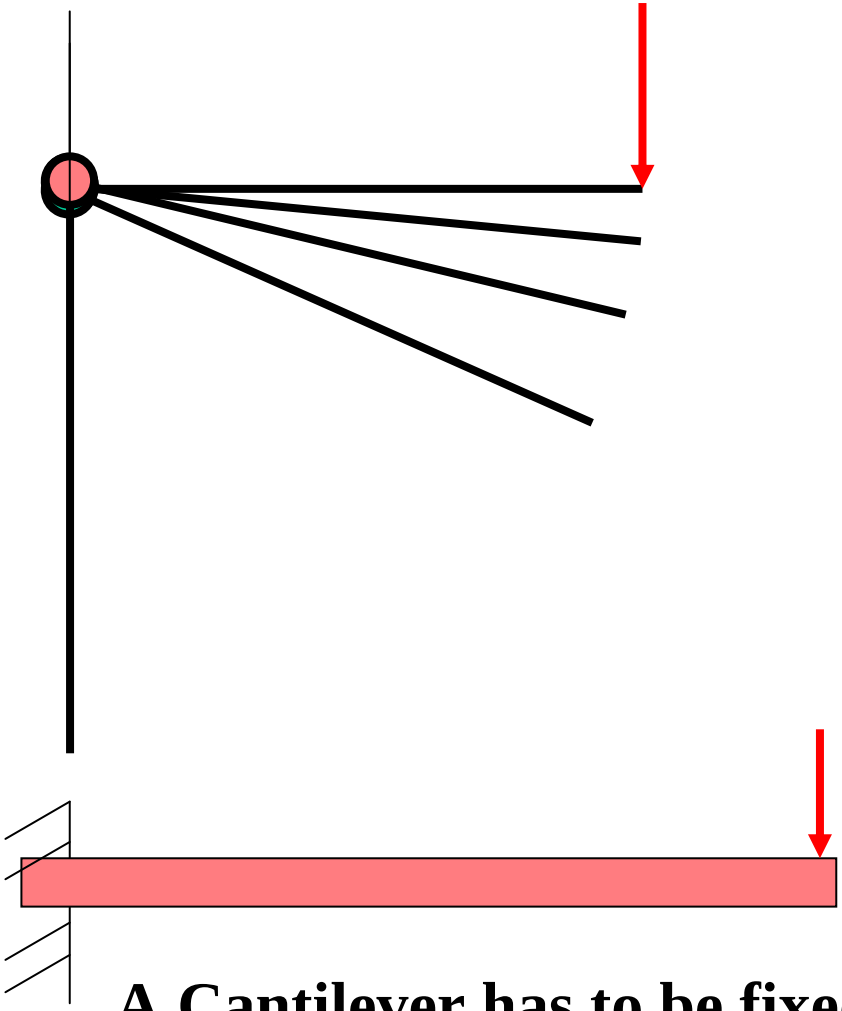

A Cantilever has to be fixed to support a load

Question 1. What is the difference between a Rigid Body and a Particle

Question 2: Explain the Difference between a Roller Support, Hinge Support and Fixed Support

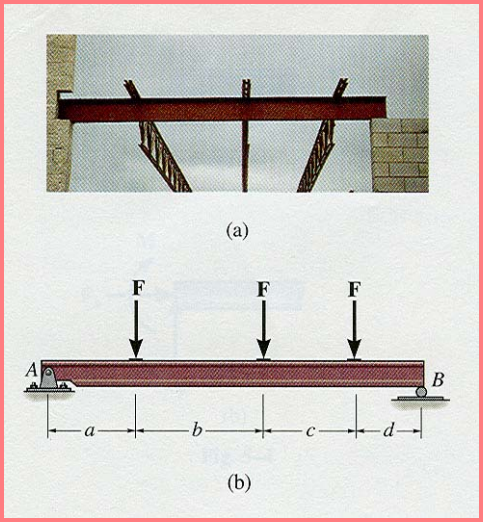

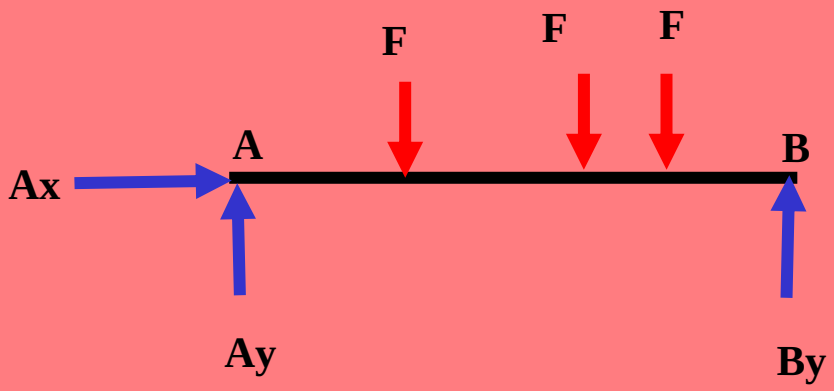

Free Body Diagram

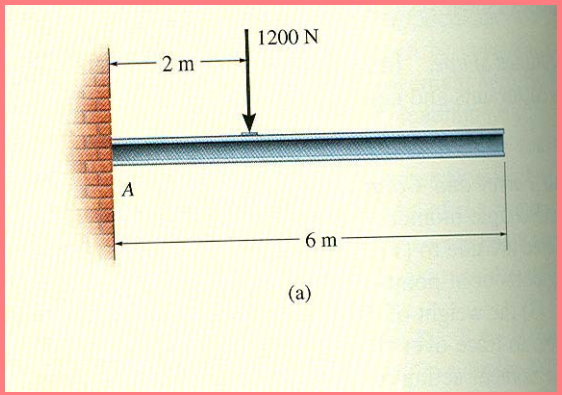

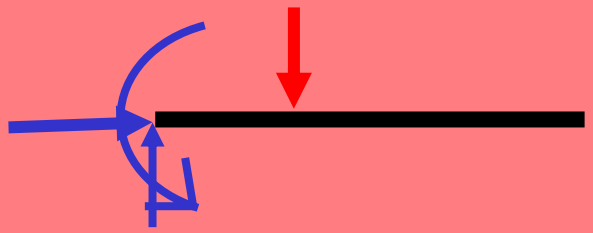

Free Body Diagram

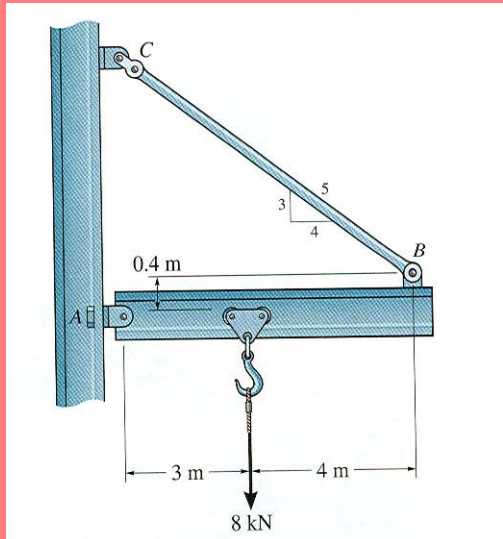

Prob. 5–4

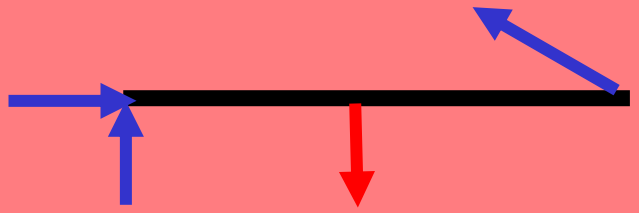

Free Body Diagram

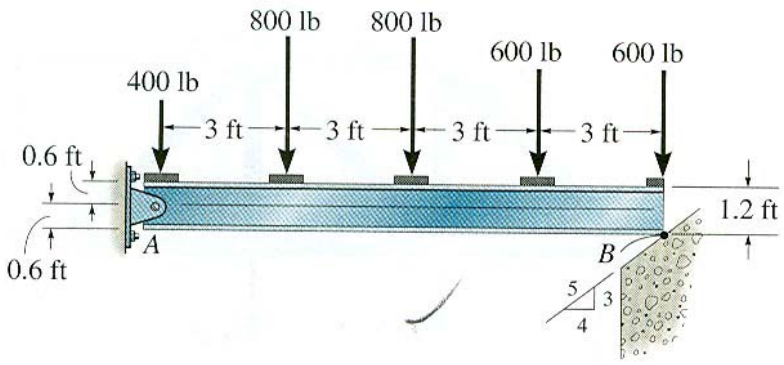

Prob. 5–7

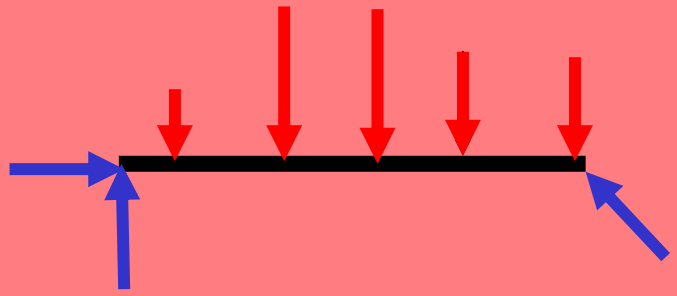

Free Body Diagram

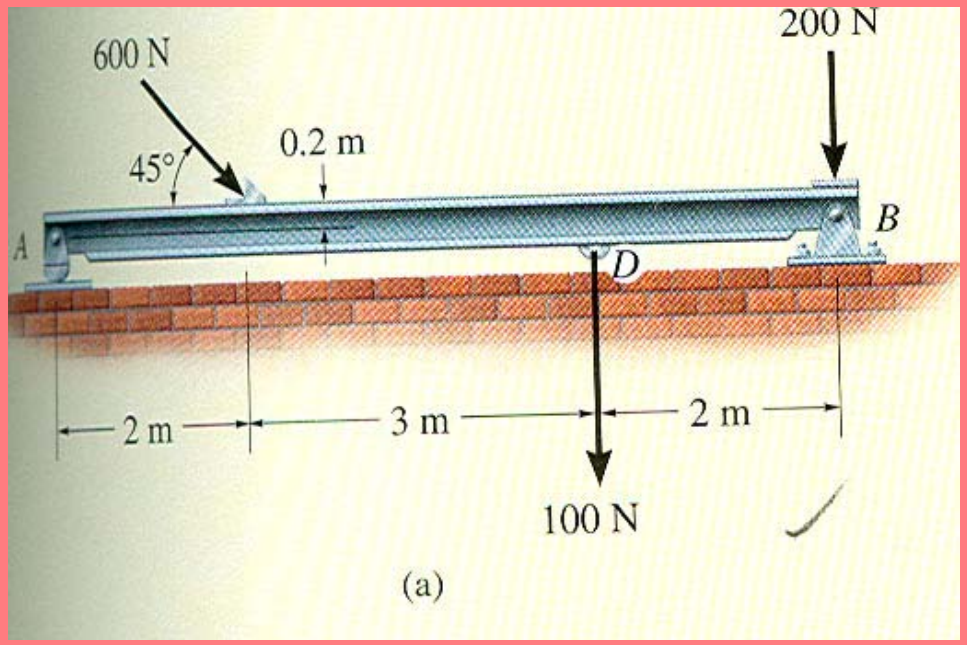

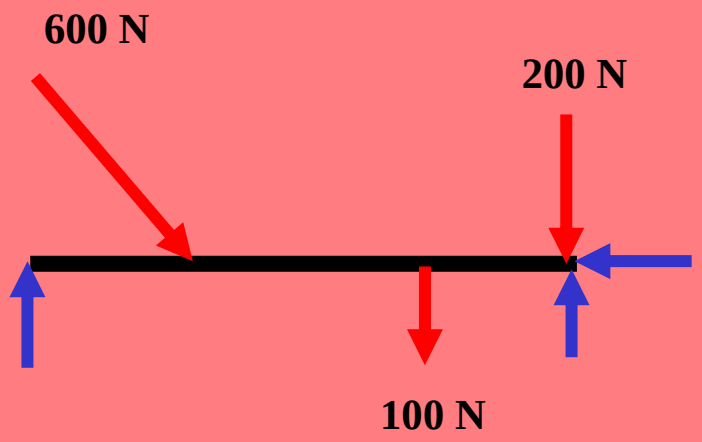

Free Body Diagram

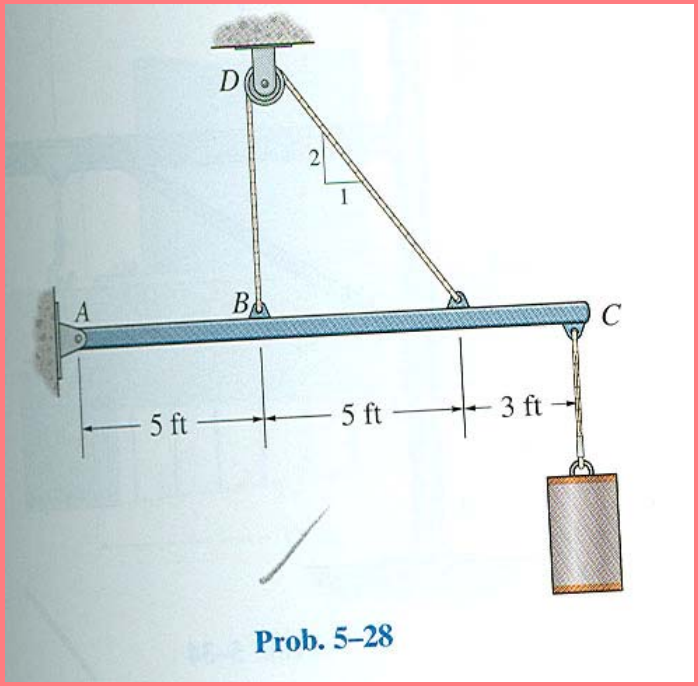

Prob. 5–28

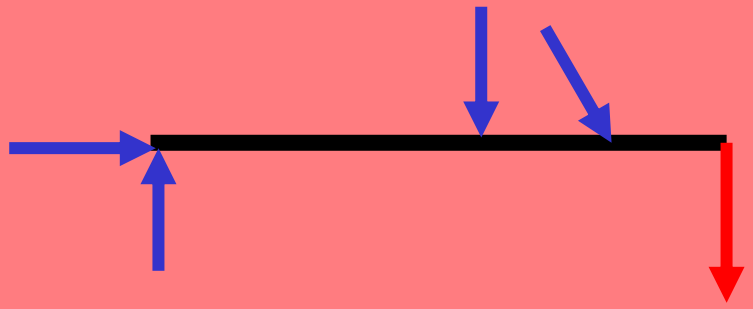

Free Body Diagram

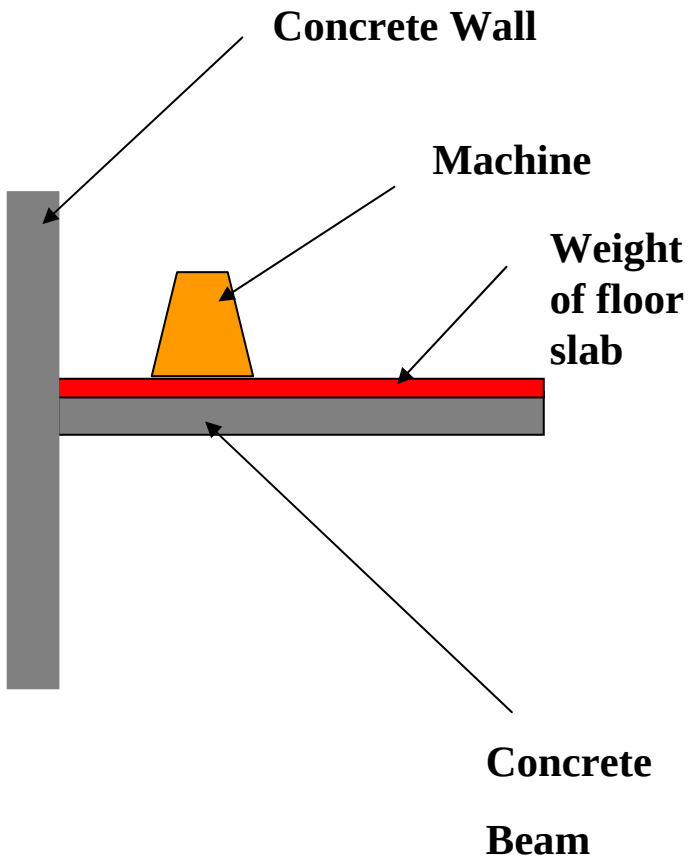

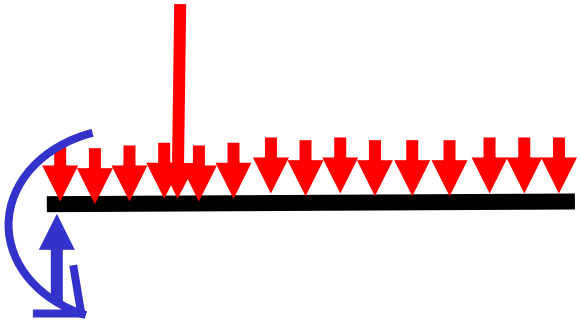

Free Body Diagram

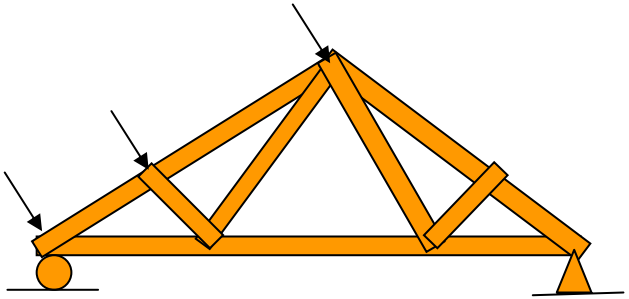

Actual Structure - A Truss

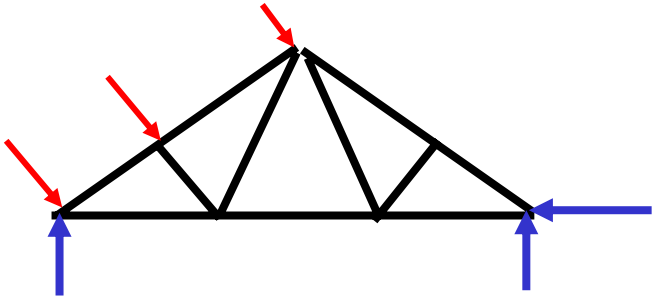

Free Body Diagram

RIGID BODY SYSTEMS

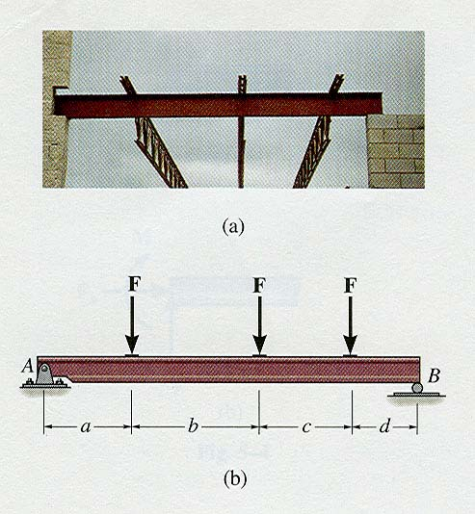

ASimple Supported Beam

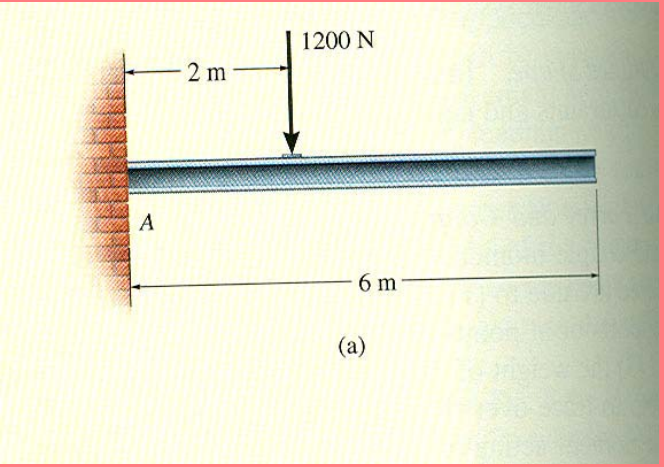

A Cantilever Beam

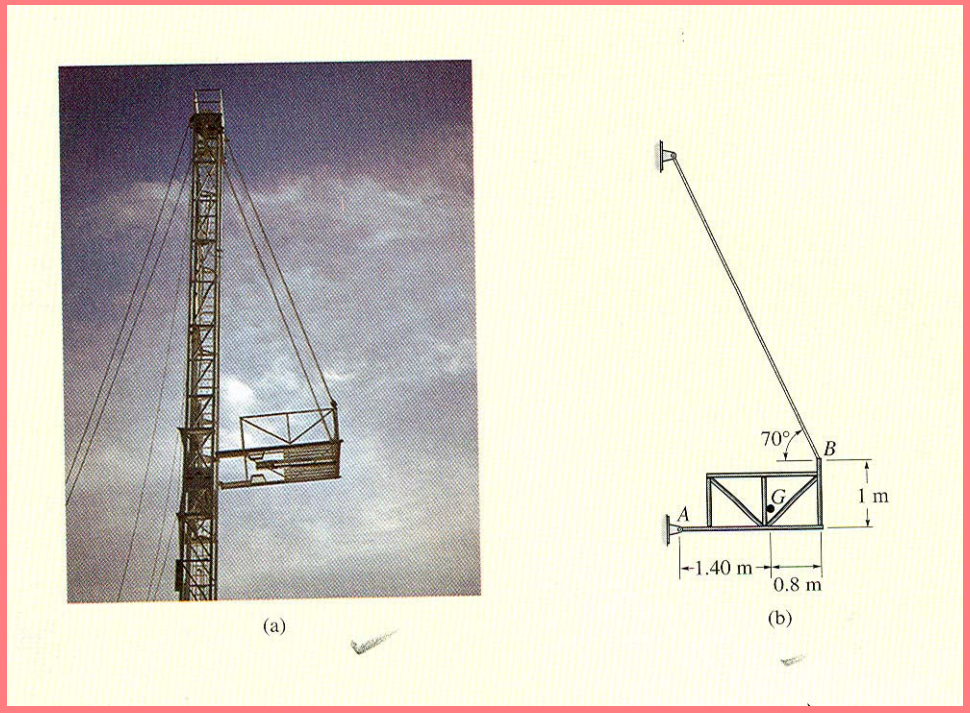

A Mast with a Platform

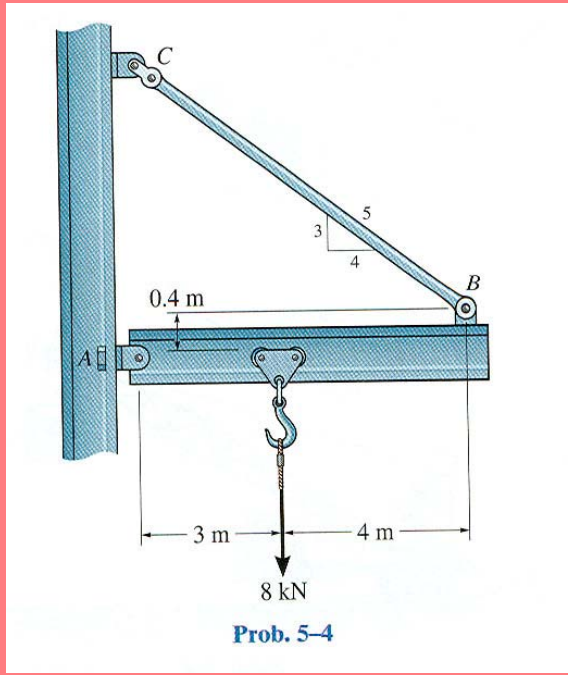

Hinged Beam with support

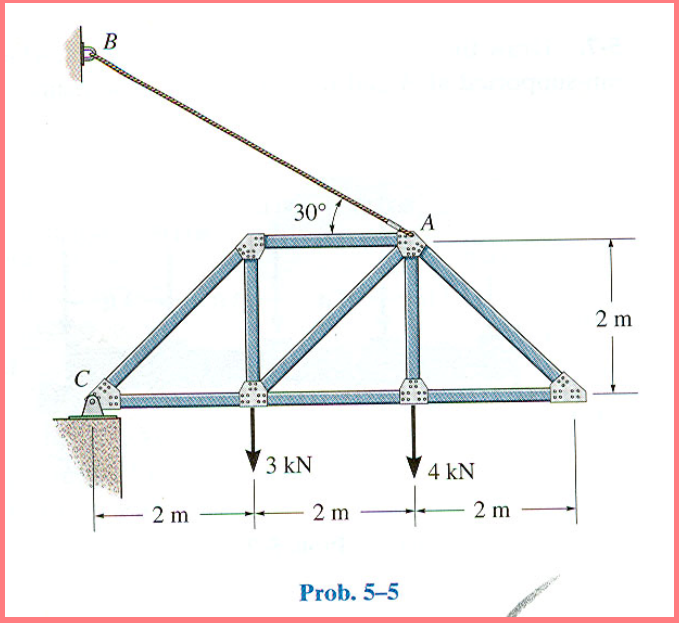

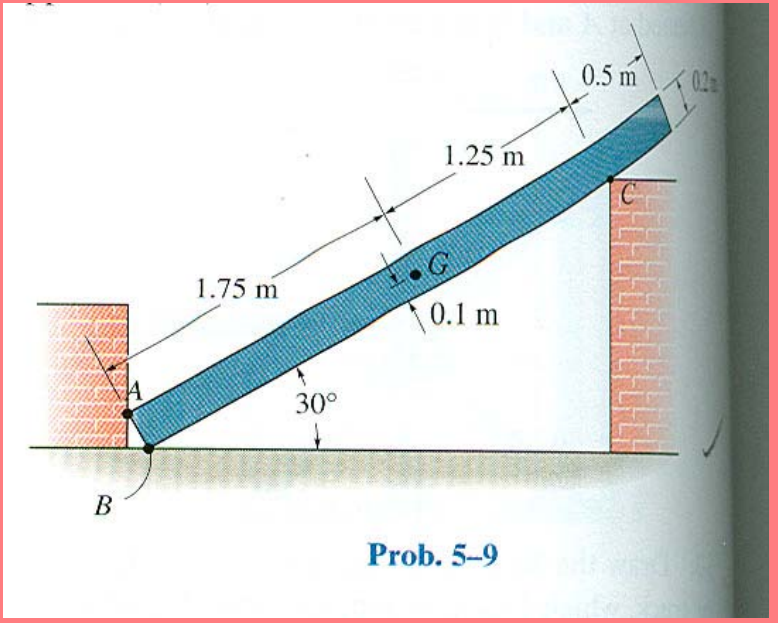

A CantileverTruss with Cable support

An Inclined Beam

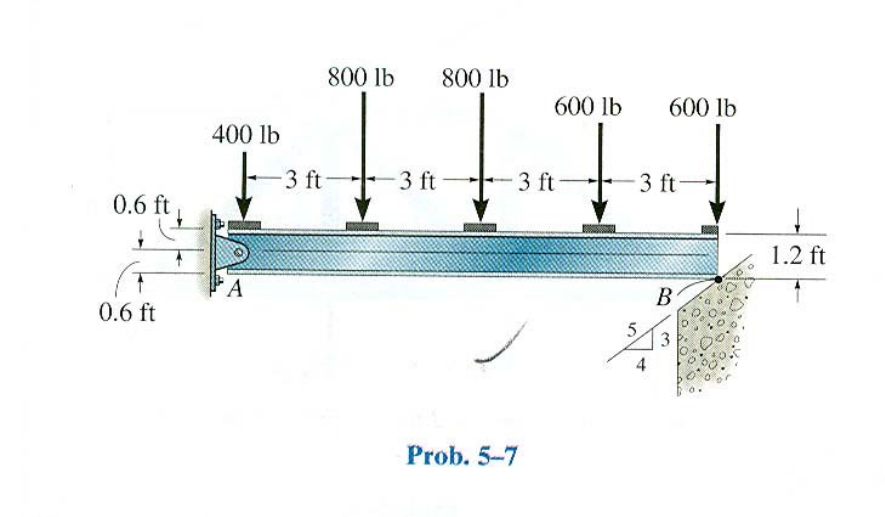

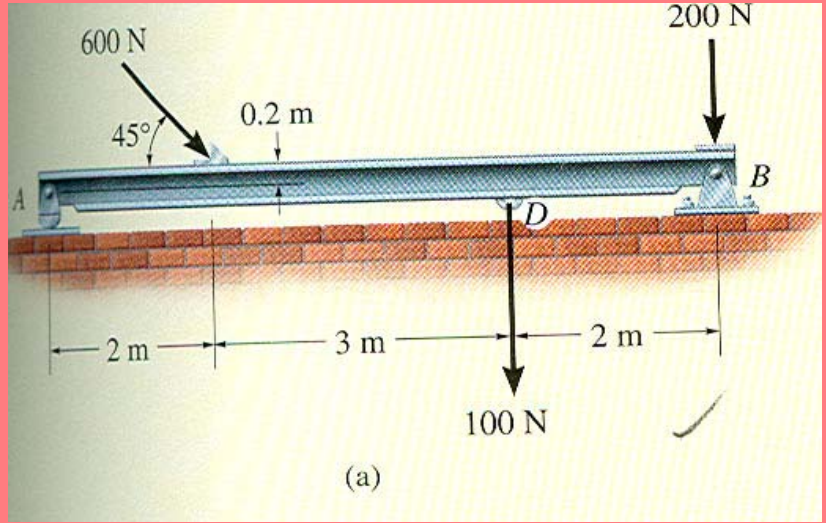

A simply supported beam

A simply supported beam

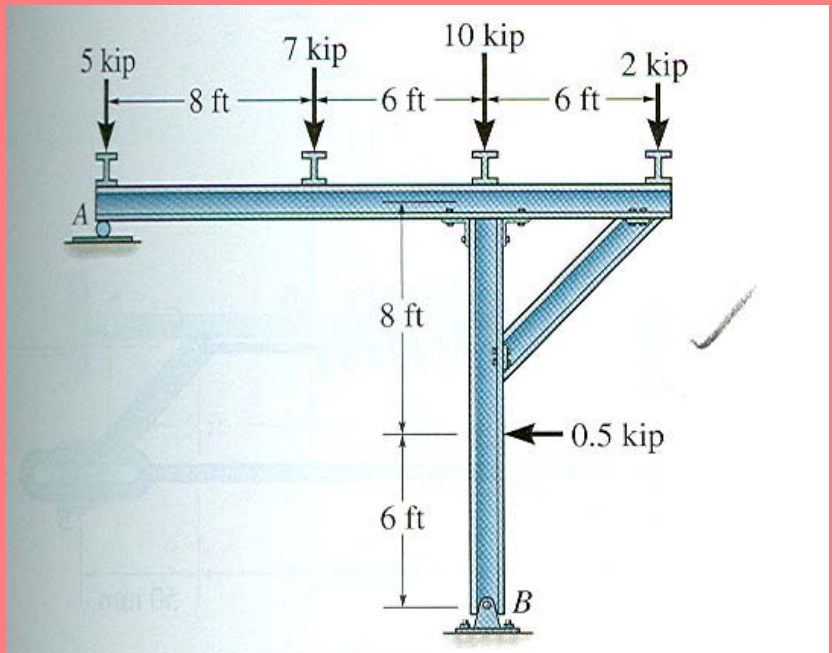

Prob. 5–20

A Beam Supported by a Column and a Knee Frane

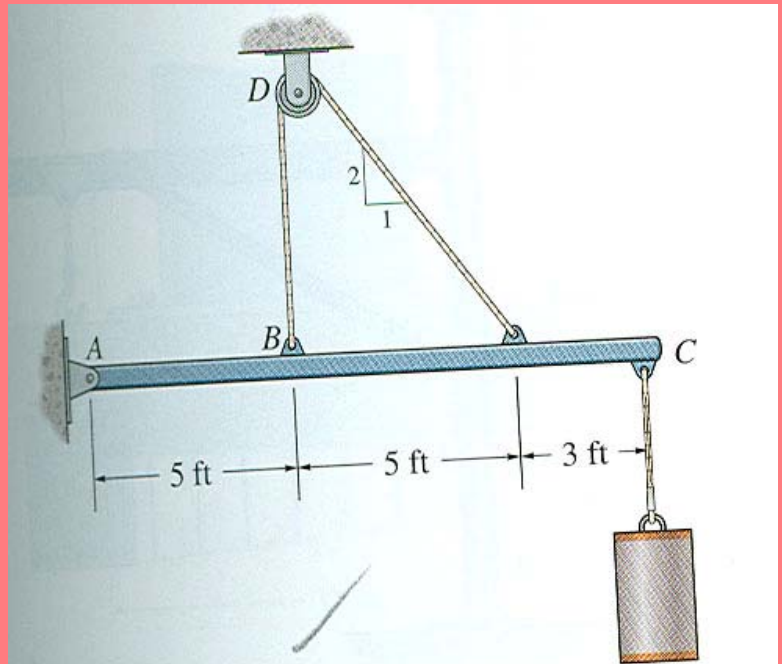

Prob. 5–28

Hinged cantilever beam with cable support

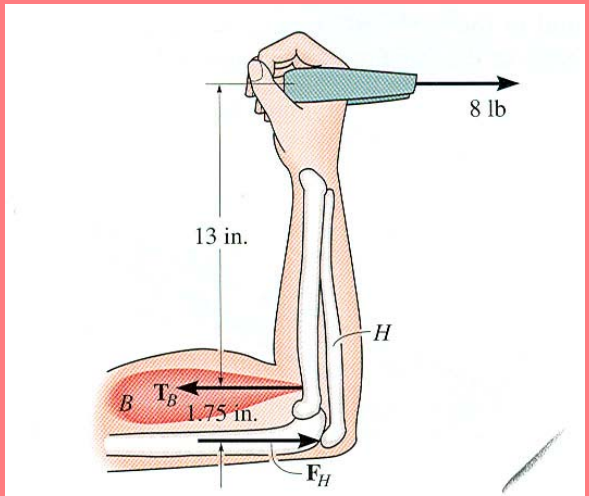

Prob. 5–22

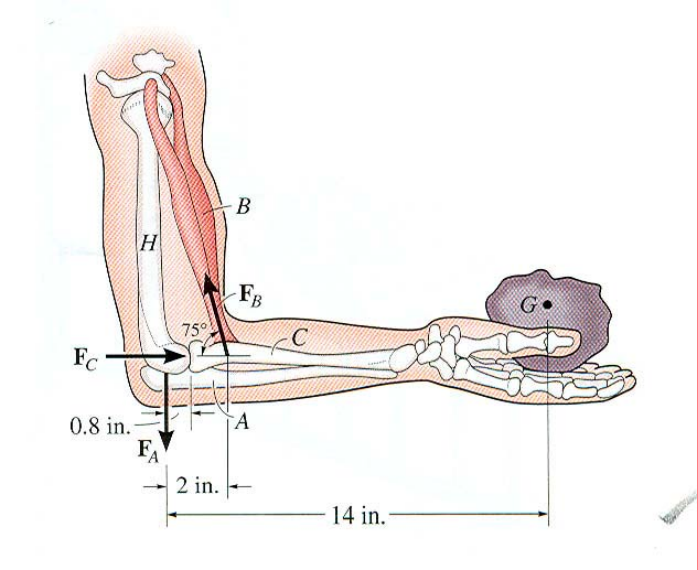

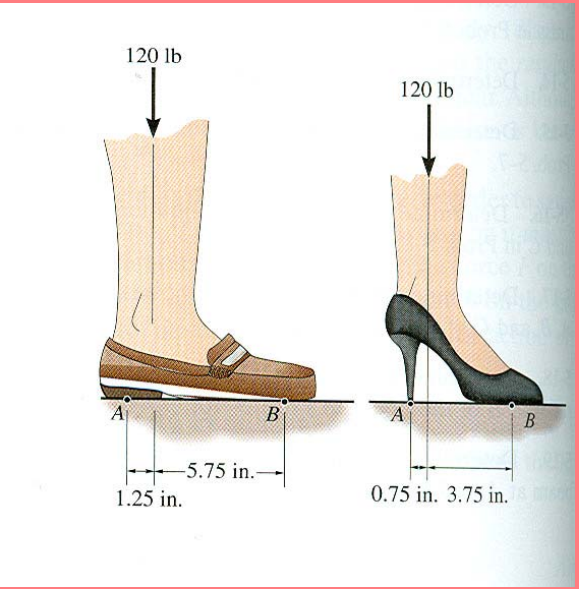

Examples from Bio-Medical

Engineering – Human structural systems

Problem

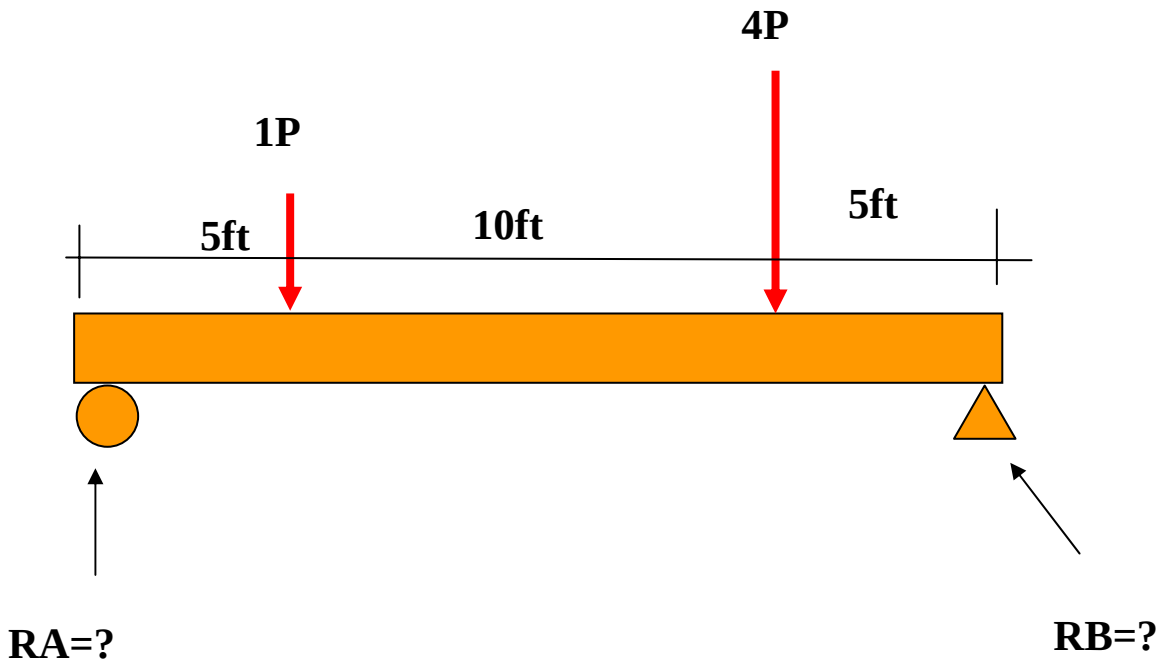

Problem

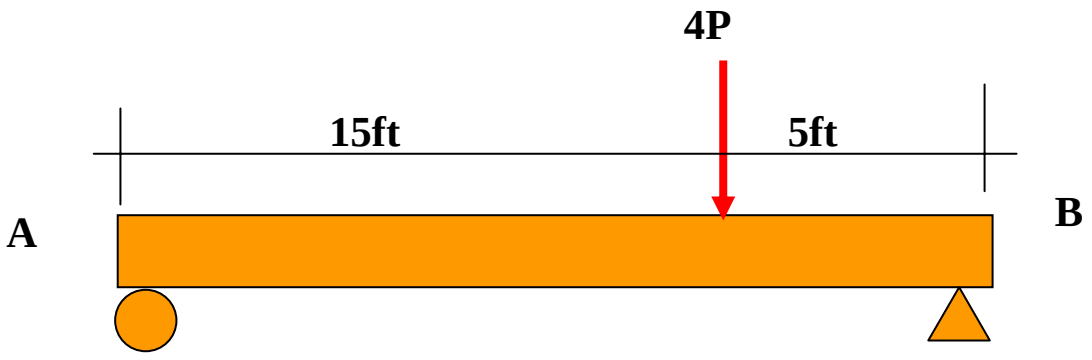

Problem

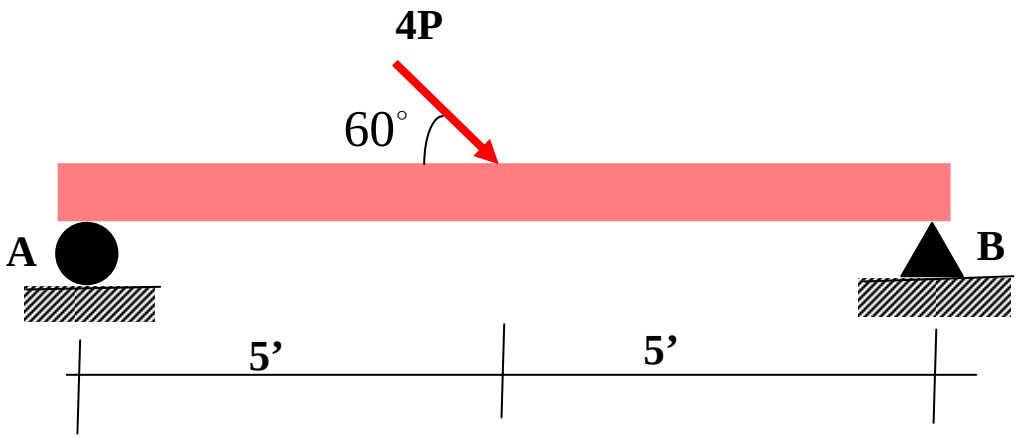

W= 50lb/ft

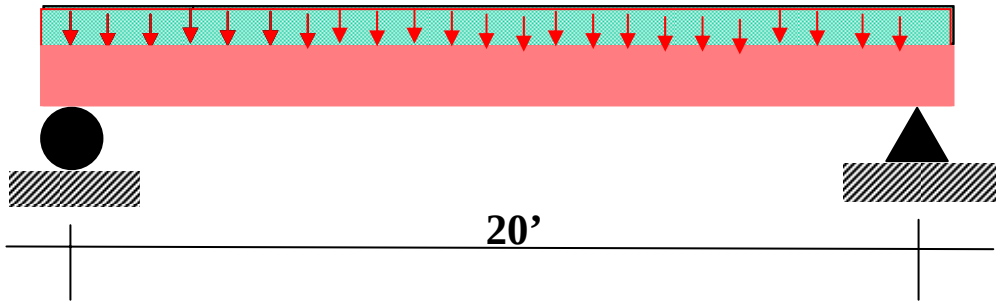

=

Equivalent total load = 50 lb/ft x 20’= 1000 lb

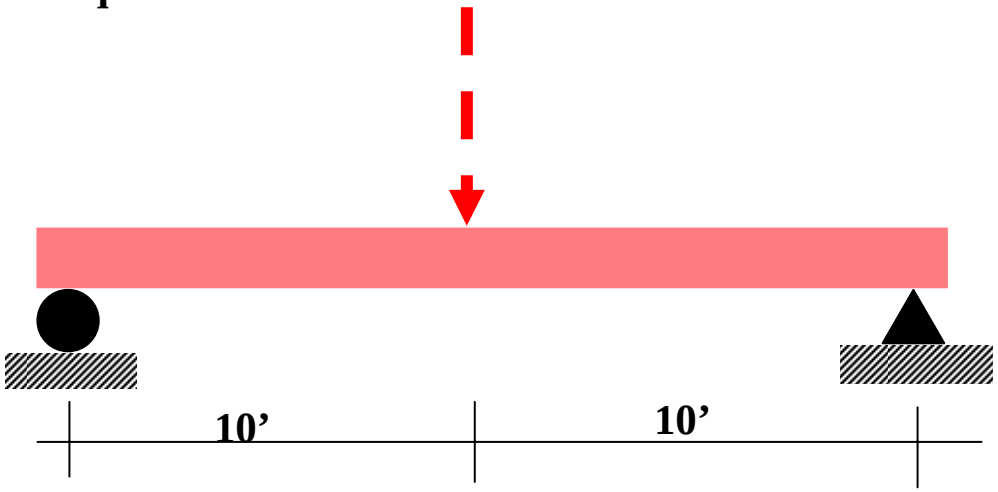

Resultant of Two Parallel Forces

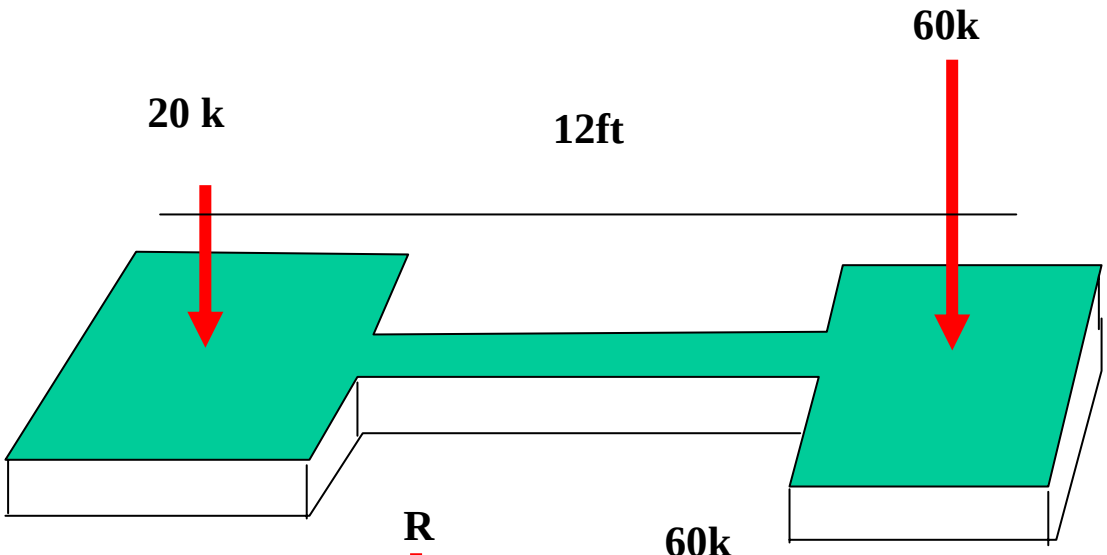

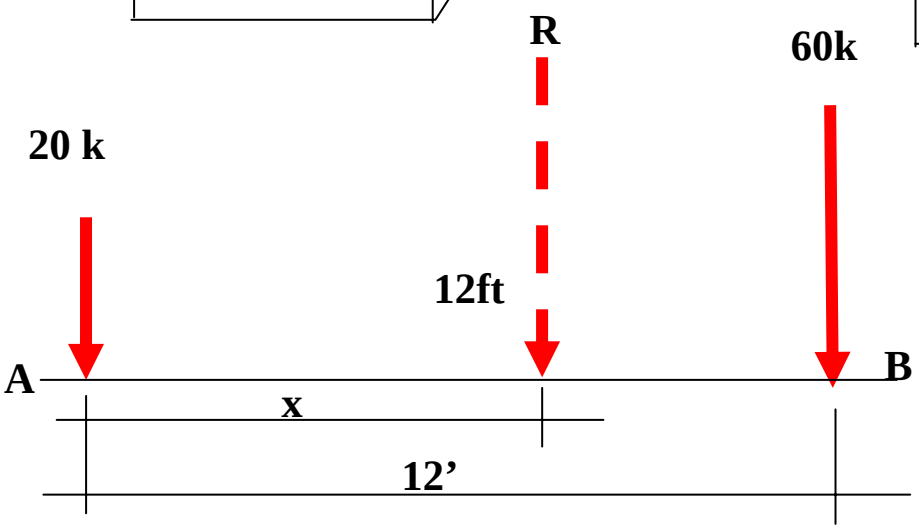

R= -20 -60=-80k

Moment about A

-R.x = -60.12

x = 9 ft

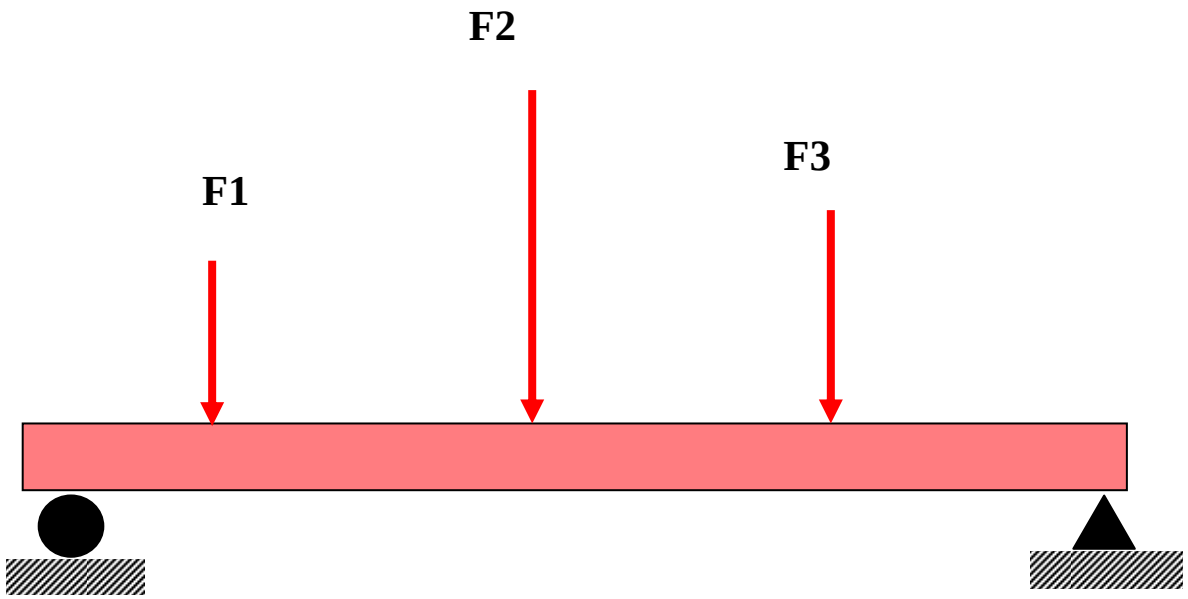

Question : Draw the Free Body diagram for the above beam

Common Supports

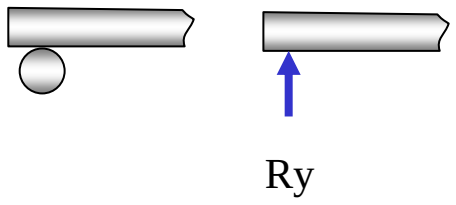

Roller Support

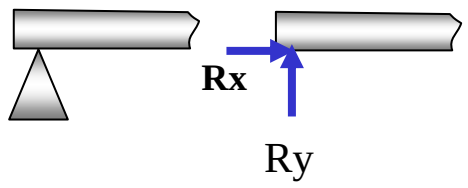

Hinge Support

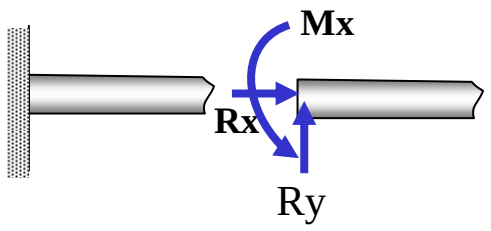

Fixed Support

Free Body Diagrams

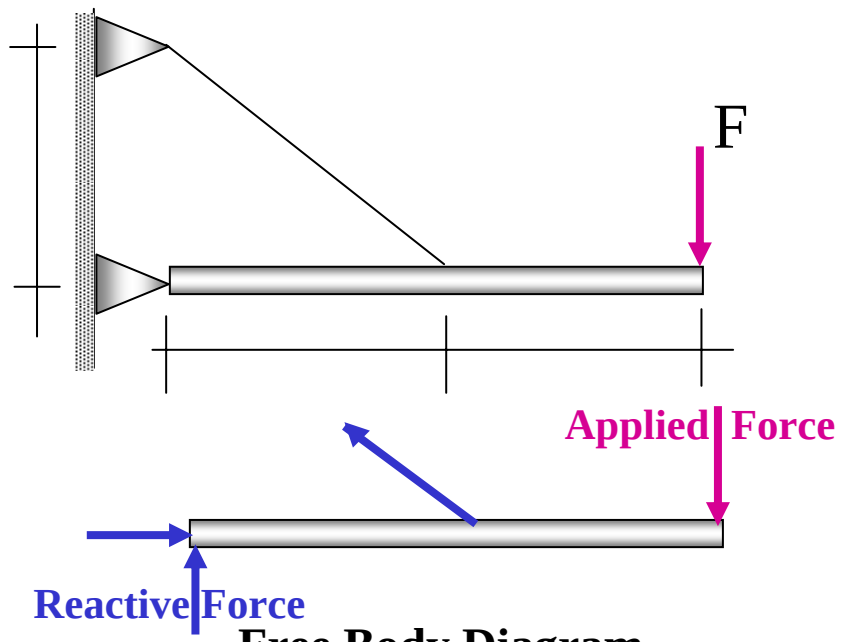

Free Body Diagram

$$\Sigma F_x = 0$$

$$\Sigma F_y = 0$$

$$\Sigma M_i = 0$$

Statical Determinacy,Indeterminacy,Improper Constraints

Beams

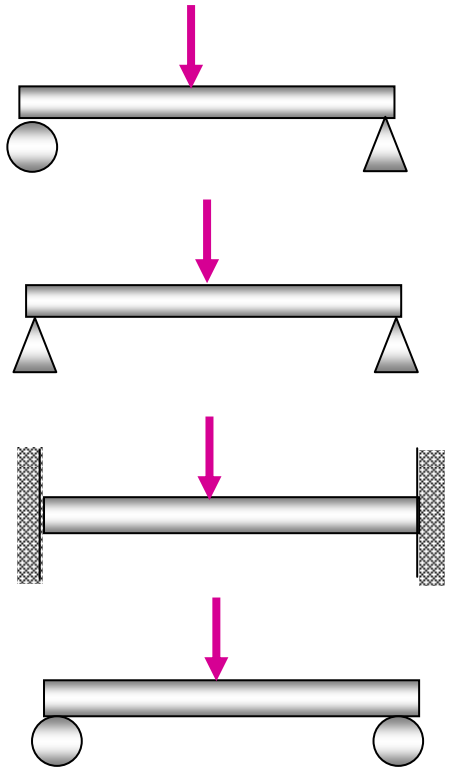

Determinate

Indeterminate, O=1

Indeterminate, O=3

Unstable

Statical Determinacy,Indeterminacy,Improper Constraints

Trusses

b=2n-3

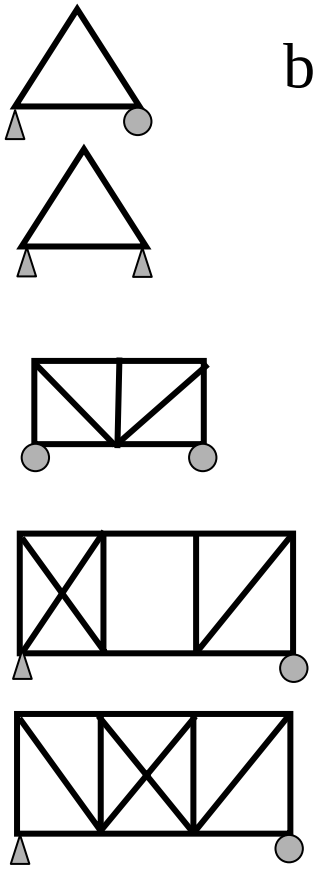

E	I
D	D
I	D
U	D
D	U
D	I
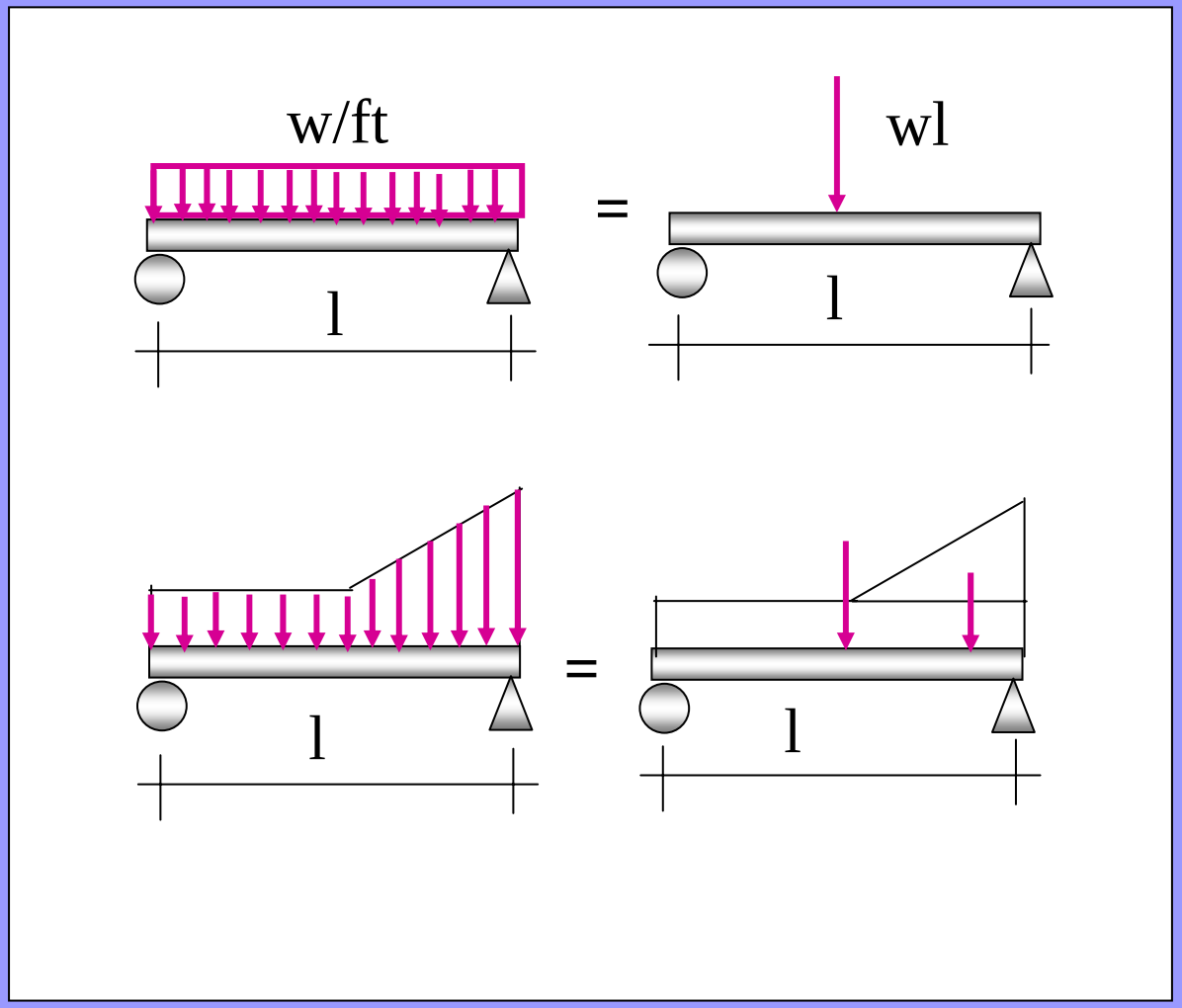
Equilibrium of Rigid Bodies